PARTS BOOK

SKID-STEER DRUM MULCHER

72”(1829MM) DRUM MULCHER

DOC #15-1356 SERIAL #34546+

WARRANTY + SERVICE 888.960.0364
PARTS 888.960.0361

Diamond MOWERS™

DIAMONDMOWERS.COM

TABLE OF CONTENTS

CUTTER ASSEMBLIES

DECK ASSEMBLY....4
BEARING ASSEMBLY - 10-1092, DRIVE SIDE....6
BEARING ASSEMBLY - 10-1093, IDLE SIDE....7
DRIVE ASSEMBLY - 32-45GPM (119-171LPM)....8
DECK FEED ASSEMBLY....10
DRUM ASSEMBLY....12
DECAL ASSEMBLY....13

APPENDIX

O-RINGS - S.A.E....15
S.A.E. TORQUE SPECIFICATIONS....16
METRIC TORQUE SPECIFICATIONS....16

CUTTER ASSEMBLIES

CUTTER ASSEMBLIES

DECK ASSEMBLY

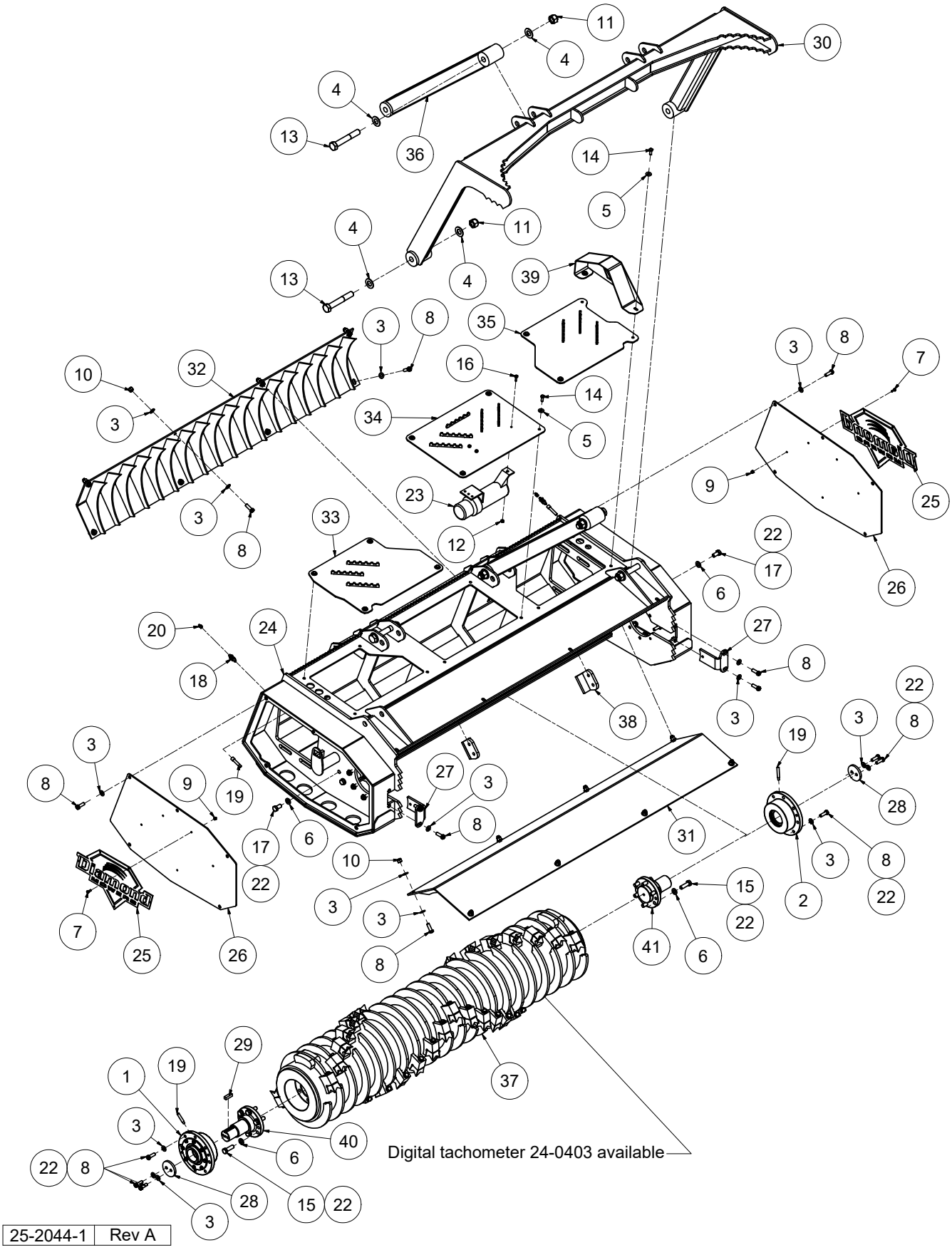

25-2044-1	Rev A

© Diamond Mowers®, LLC

CUTTER ASSEMBLIES

DECK ASSEMBLY

REF#	PARTS DESCRIPTION	REQ	PART#	TORQUE (ft-lbs)
1	BEARING ASSEMBLY, DRUM MULCHER, FIXED (DRIVE)	1	10-1092	
2	BEARING ASSEMBLY, DRUM MULCHER, FLOATING (IDLER)	1	10-1093	
3	1/2 X 1.062 GR 8 SAE FLAT WASHER, YELLOW ZINC	60	11-0042	
4	1 X 2 GR 8 SAE FLAT WASHER, YELLOW ZINC	12	11-0056	
5	3/8 THRU-HARDENED FLAT WASHER, YELLOW ZINC	14	11-0092	
6	M16 THRU-HARDENED FLAT WASHER, ECOGUARD	16	11-0102	
7	1/4-20 X 3/4 GR 5 HEX CAP, ZINC	10	11-0588	8.4
8	1/2-13 X 1-1/2 GR 8 HEX CAP SCREW, YELLOW ZINC	48	11-0972	106
9	1/4-20 GR 5 NYLOCK NUT, ZINC	10	11-1022	
10	1/2-13 GR 8 NYLOCK NUT, ZINC	12	11-1072	
11	1 NC NYLOCK NUT, GR 8	6	11-1082	
12	1/4-20 GR 5 NYLOCK FLANGE NUT, ZINC	3	11-1090	
13	1-8 X 6-1/2 GR 8 HEX CAP, YELLOW ZINC	6	11-1622	909
14	3/8-16 X 1 GR 8 HEX CAP, YELLOW ZINC	12	11-1624	44
15	5/8-11 X 2 GR 8 HEX CAPSCREW, YELLOW ZINC	12	11-1672	240
16	1/4-20 X 1 GR 5 HEX FLANGE BOLT, ZINC	3	11-2210	8.5
17	5/8-11 X 1-1/4 GR 8 HEX CAPSCREW	4	11-2268	212
18	BULKHEAD, 1/8 MP X 1/4 MJIC	2	21-1687	
19	GREASE HOSE, 1/8" X 24" (1/8MP X 1/4 FJIC)	2	21-4840	
20	GREASE ZERK 1/8" FEM. NPT	2	23-0008	
21	#2 LITHIUM GREASE (NOT SHOWN)	1	23-0015	
22	LOCTITE 262, .017 OZ (RED)	1	24-0382	
23	LARGE MANUAL CANISTER, 12" X 3.25"	1	24-0397	
24	SHELL, FDS072	1	25-0370	
25	DIAMOND LOGO CUTOUT	2	31-0670	
26	BELT COVER, FDS	2	31-0921	
27	SLOT COVER, FDS	2	31-1080	
28	RETENTION PLATE, INNER RING, FDS	2	31-1084	
29	KEY 1/2 X 1/2 X 1-3/4	1	37-0022	
30	PUSH BAR	1	41-1601	
31	UPPER LINER	1	41-1602	
32	LOWER LINER	1	41-1603	
33	RIGHT TOP GRIPPER COVER, FDS072	1	41-1771	
34	CENTER TOP GRIPPER COVER, FDS072	1	41-1772	
35	LEFT TOP GRIPPER COVER, FDS072	1	41-1773	
36	PUSH BAR BRACE TUBE, FDS	2	41-1997	
37	DRUM WELDMENT, FDS072, GEN II BEARING	1	41-2229	
38	FDS SHEAR PLATE, GEN II BEARING	2	41-2231	
39	HOSE GUARD, FDS/ODS	1	41-2236	
40	DRUM SHAFT, DRIVE SIDE, GEN II	1	90-7107	
41	DRUM SHAFT, IDLER SIDE, GEN II	1	90-7108	

25-2044-1	Rev A

© Diamond Mowers®, LLC

BEARING ASSEMBLY - 10-1092, DRIVE SIDE

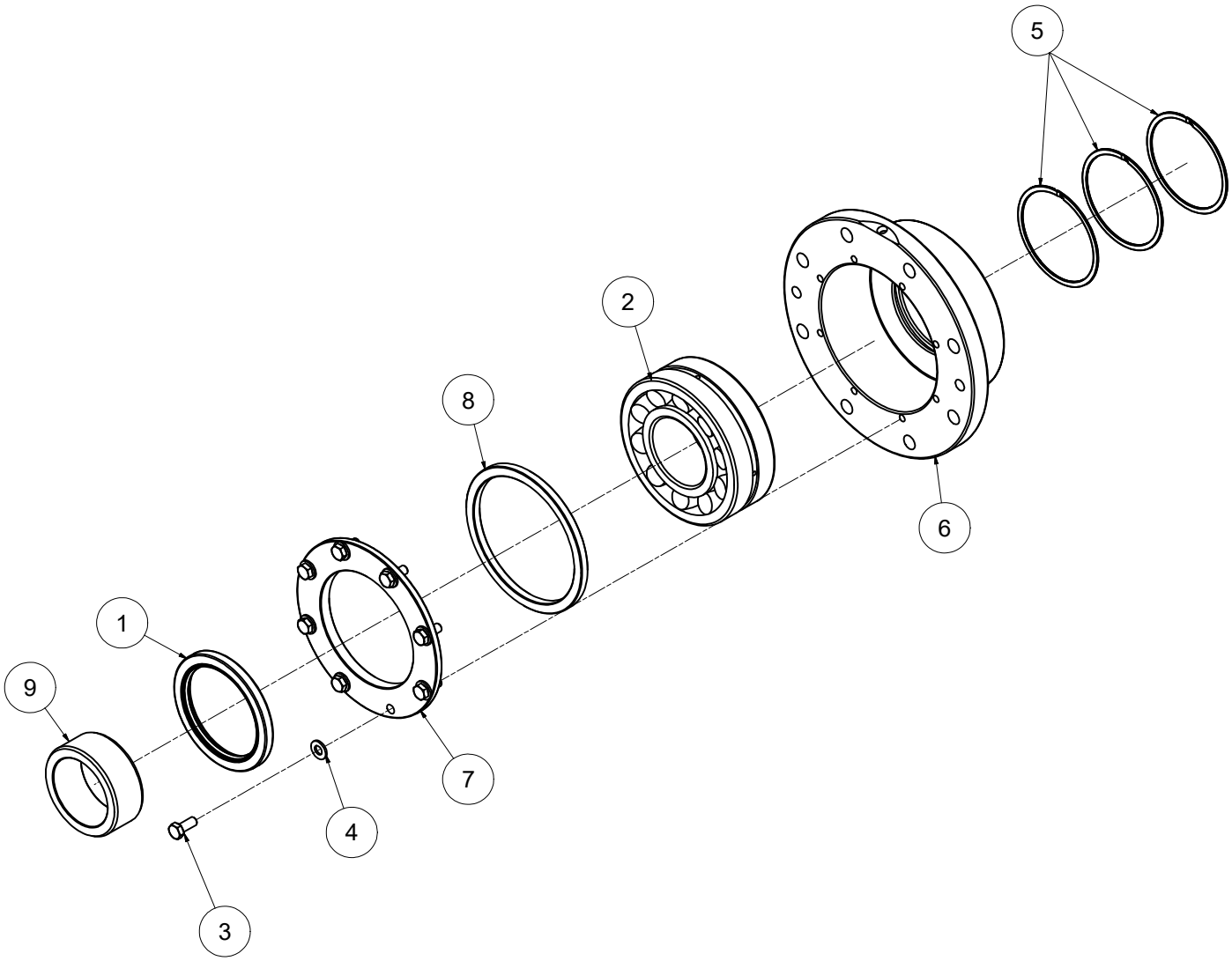

REF#	PARTS DESCRIPTION	REQ	PART#	TORQUE (ft-lbs)
1	ROTARY SEAL	1	10-0123	
2	SPHERICAL ROLLER BEARING	1	10-1087	
3	5/16-18 X 3/4 GR 8 HEX CAP SCREW, YELLOW ZINC	8	11-2266	18
4	5/16 SAE THRU HARDENED FLAT WASHER	8	11-2267	
5	SPIRAL RING	3	24-0416	
6	DRUM BEARING HOUSING	1	90-7105	
7	BEARING COVER	1	90-7109	
8	BEARING SPACER, OUTER RING	1	90-7112	
9	SPACER, INNER RACE	1	90-7114	

10-1092	Rev A

© Diamond Mowers®, LLC

BEARING ASSEMBLY - 10-1093, IDLE SIDE

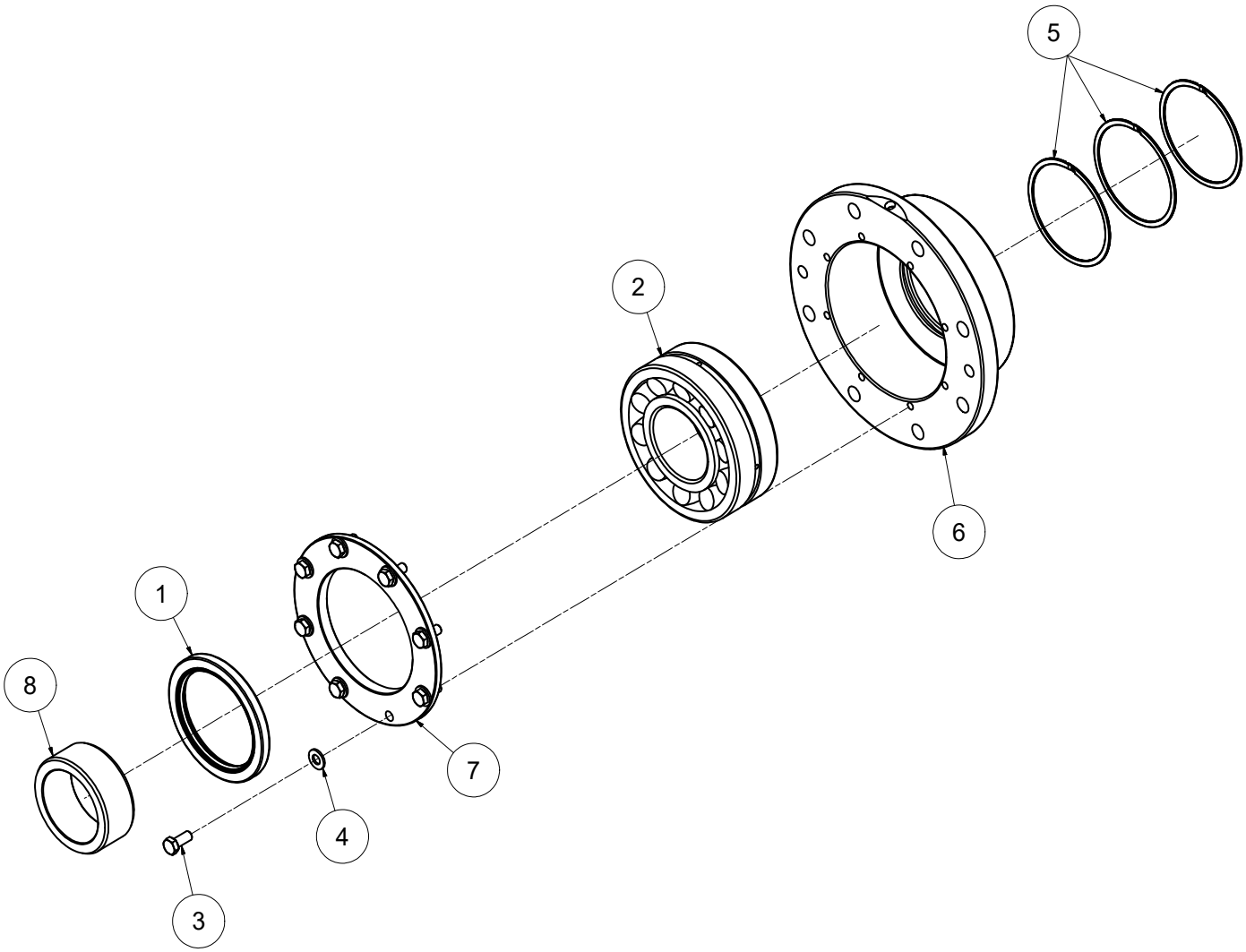

REF#	PARTS DESCRIPTION	REQ	PART#	TORQUE (ft-lbs)
1	ROTARY SEAL	1	10-0123	
2	SPHERICAL ROLLER BEARING	1	10-1087	
3	5/16-18 X 3/4 GR 8 HEX CAP SCREW, YELLOW ZINC	8	11-2266	18
4	5/16 SAE THRU HARDENED FLAT WASHER	8	11-2267	
5	SPIRAL RING	3	24-0416	
6	DRUM BEARING HOUSING	1	90-7105	
7	BEARING COVER	1	90-7109	
8	SPACER, INNER RACE	1	90-7114	

10-1093	Rev A

© Diamond Mowers®, LLC

CUTTER ASSEMBLIES

DRIVE ASSEMBLY - 32-45GPM (119-171LPM)

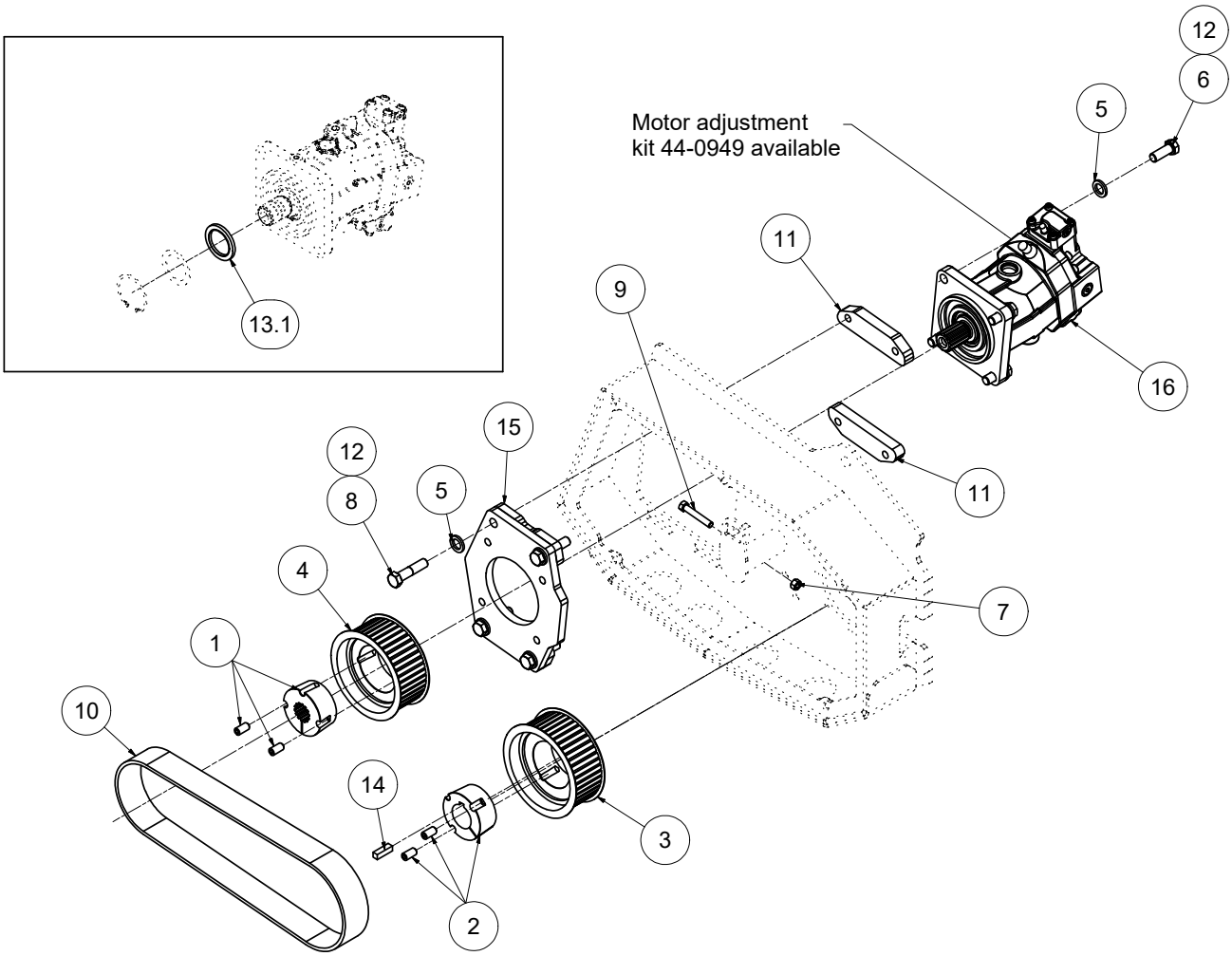

REF#	PARTS DESCRIPTION	REQ	PART#	TORQUE (ft-lbs)
1	BUSHING, 1-3/4 13T, DRUM MULCHER	1	10-1060	55
2	BUSHING, 2-3/16 KEYED, DRUM MULCHER	1	10-1061	55
3	PULLEY, 201MM X 85MM	1	10-1063	
4	PULLEY, 165MM X 85MM	1	10-1064	
5	3/4 SAE GR 8 FLAT WASHER, YELLOW	8	11-0039	
6	3/4-10 X 2 GR 8 HEX CAP, YELLOW ZINC	4	11-0751	376
7	1/2-13 GR 5 HEX NUT, ZINC	1	11-1016	
8	3/4-10 X 3-1/4 GR 8 HEX CAP, YELLOW ZINC	4	11-2205	376
9	1/2-13 X 3 GR 8 HEX CAP, YELLOW ZINC FULL THREAD	1	11-2206	
10	BELT, HT500, 68MM X 1568MM, DRUM MULCHER	1	12-0082	
11	MOTOR MOUNT CLAMP PLATE, DRUM MULCHER	2	24-0368	
12	LOCTITE 262, .017 OZ (RED)	1	24-0382	
13	SEAL KIT	1	30-1437	
13.1	SHAFT SEAL	1	30-1436	
14	KEY 1/2 X 1/2 X 1-3/4	1	37-0022	
15	MOTOR MOUNT, DRUM MULCHER	1	41-1606	
16	VARIABLE DISPLACEMENT BENT AXIS PISTON MOTOR	1		
	3000 PSI CARRIER SETTING		30-0586	
	3300 PSI CARRIER SETTING		30-0585	
	3500 PSI CARRIER SETTING		30-0584	
	4000 PSI CARRIER SETTING		30-0545	

25-2076-3	Rev A

© Diamond Mowers®, LLC

(This Is Page Intentionally Left Blank)

DECK FEED ASSEMBLY

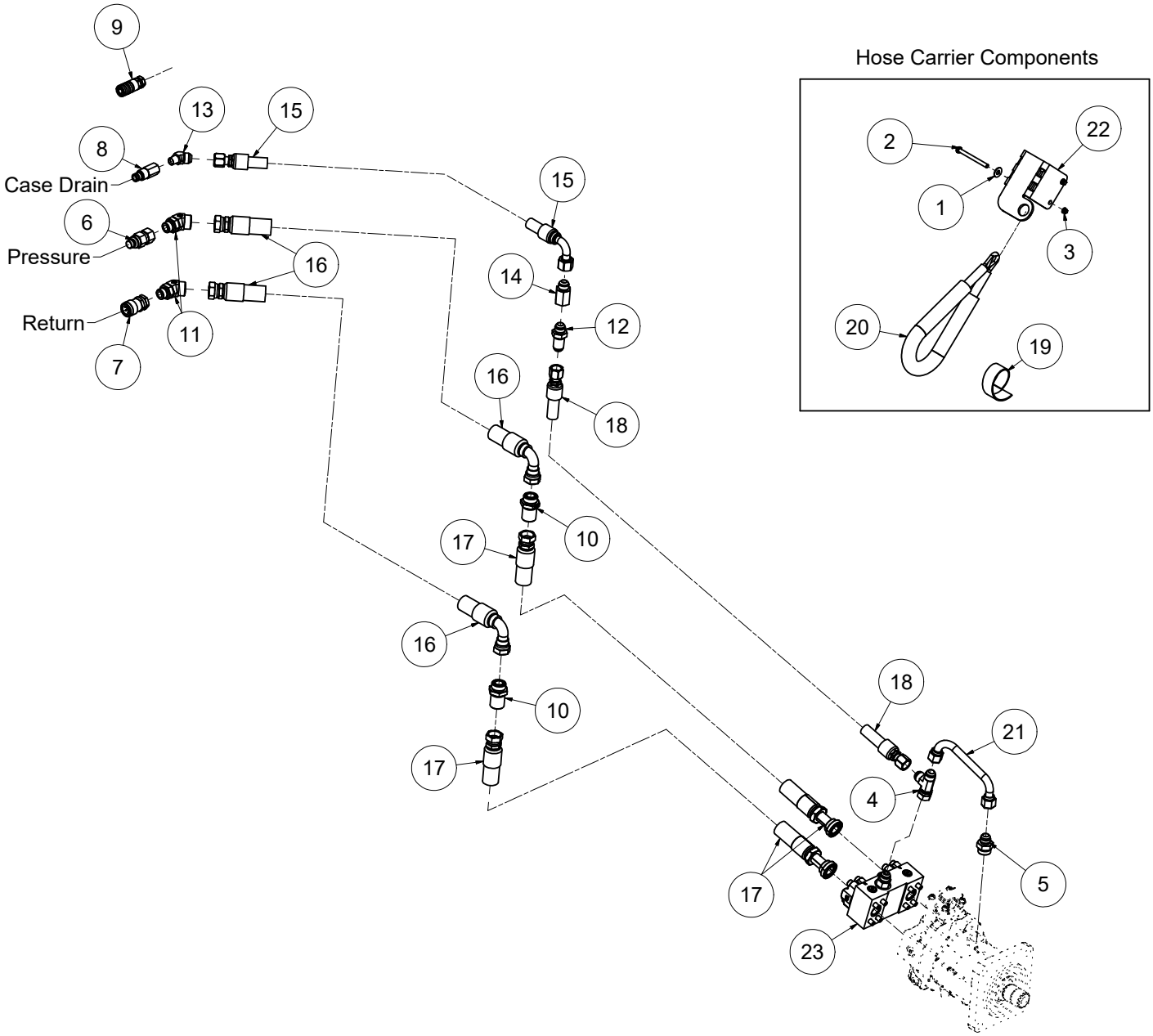

25-1736-3	Rev H

© Diamond Mowers®, LLC

DECK FEED ASSEMBLY

REF#	PARTS DESCRIPTION	REQ	PART#	TORQUE (ft-lbs)
1	3/8 THRU-HARDENED FLAT WASHER, YELLOW ZINC	2	11-0092	
2	3/8-16 X 4 GR 5 HEX CAP, ZINC	2	11-0581	31
3	3/8-16 GR 5 NYLOCK FLANGE NUT, ZINC	2	11-1091	
4	TEE, 3/4MJIC X 3/4MJIC X 3/4FJIC	1	21-1130	
5	1M-OR X 3/4MJIC, ADAPTER	1	21-1536	
6	1/2" MALE QUICK COUPLER X 3/4" SAE, FLAT FACE, NO SPILL	1	21-1559	
7	1/2" FEMALE QCK COUPLER X 3/4" SAE, FLAT FACE, NO SPILL	1	21-1560	
8	3/8" MALE QUICK COUPLER, FLAT FACE, NO SPILL	1	21-1561	
9	3/8" FEMALE QUICK COUPLER, FLAT FACE, NO SPILL	1	21-1562	
10	BULKHEAD, 1FS X 1FS	2	21-1645	
11	ELBOW, -12 ADJ MOR X -16 MFS, 45 DEG	2	21-1689	
12	BULKHEAD, -12MJIC X -12MJIC	1	21-1709	
13	ADAPTER 3/4MJIC x 1/2MP -45DEG	1	21-1731	
14	CHECK VALVE, 3/4 MJIC X 3/4 FJIC, CHECKED FROM MALE TO FEMALE	1	21-1774	
15	HOSE 3/4 x 88, 3000 PSI (3/4FJIC-90DEG x 3/4FJIC)	1	21-4831	
16	HOSE, 1 X 88, 4000 PSI (-16 FFS X -16 FFS 90 DEG) KEVLAR	2	21-4832	
17	HOSE, 1 X 70, 4000 PSI (-16 CODE 62 FLANGE X -16 FFS)	2	21-4907	
18	HOSE, 3/4 X 71, 300 PSI (-12FJIC X -12FJIC)	1	21-4931	
19	HOSEGUARD 3" SPIRAL / 54"	1	24-0390	
20	ELASTIC STRAP WITH CLIPS, 24", 47lb at 60"	1	24-0391	
21	PREFORMED TUBE, CASE DRAIN, FDS	1	28-0093	
22	BRACKET HOSE SUPPORT	1	31-1063	
23	MOTOR MOUNTED ANTI CAVITATION MANIFOLD, A6VM	1	39-0134	
*	OPTIONAL QUICK COUPLERS			
	5/8 MALE QUICK COUPLER, FLAT FACE	1	21-1574	
	5/8 FEMALE QUICK COUPLER, FLAT FACE	1	21-1575	
	3/4 MALE QUICK COUPLER, FLAT FACE	1	21-1576	
	3/4 FEMALE QUICK COUPLER, FLAT FACE	1	21-1577	

* NOT SHOWN

25-1736-3	Rev H

DRUM ASSEMBLY

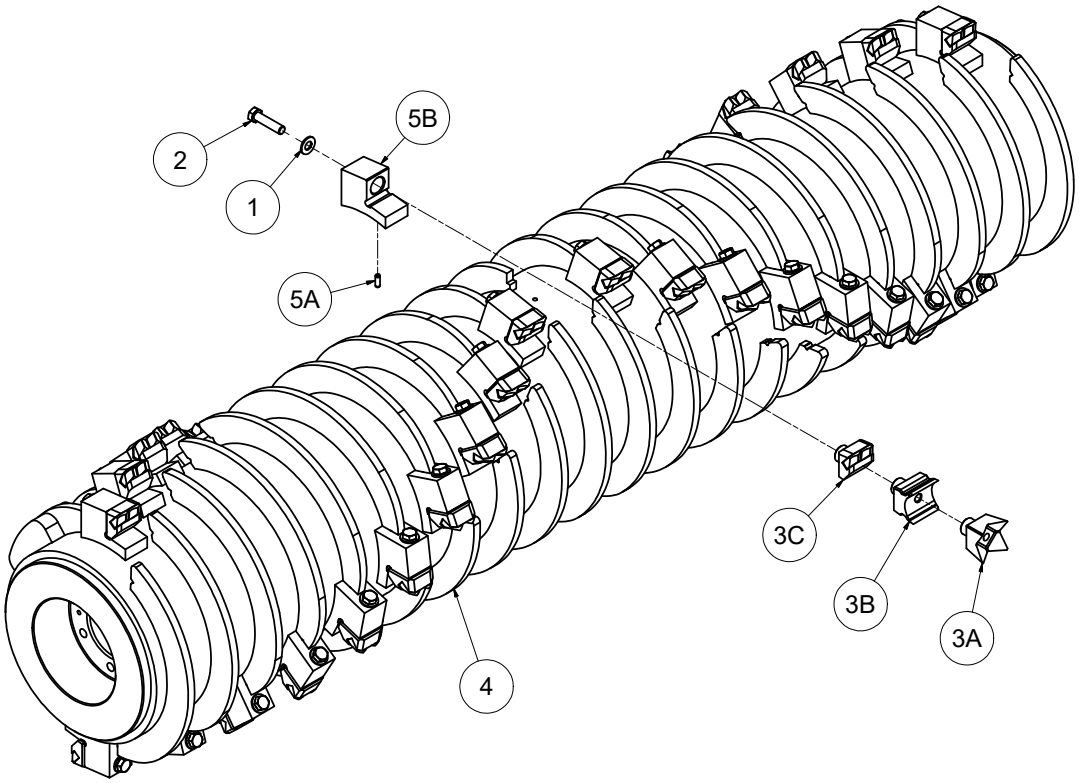

REF#	PARTS DESCRIPTION	REQ	PART#	TORQUE (ft-lbs)
1	1/2 X 1.062 GR 8 SAE FLAT WASHER, YELLOW ZINC	41	11-0042	
2	1/2-20 X 2 GR 8 HEX CAP, YELLOW ZINC	41	11-0633	120
3A	FOUR-POINT HARDENED STEEL TOOTH	41	22-0019	
3B	TWIN CHISEL® TOOTH	41	22-0041	
3C	TWIN MAUL® CARBIDE TOOTH	41	22-0044	
4	DRUM WELDMENT, FDS072, GEN II BEARING	1	41-2229	
5	ASSEMBLY, TOOTH HOLDER, CHAMFERED FRONT	41	90-7122	
5A	SPRING PIN	41	11-2148	
5B	TOOTH HOLDER, CHAMFERED FRONT	41	90-7121	

24-0432, 33, 34	Rev A, A, A

© Diamond Mowers®, LLC

DECAL ASSEMBLY

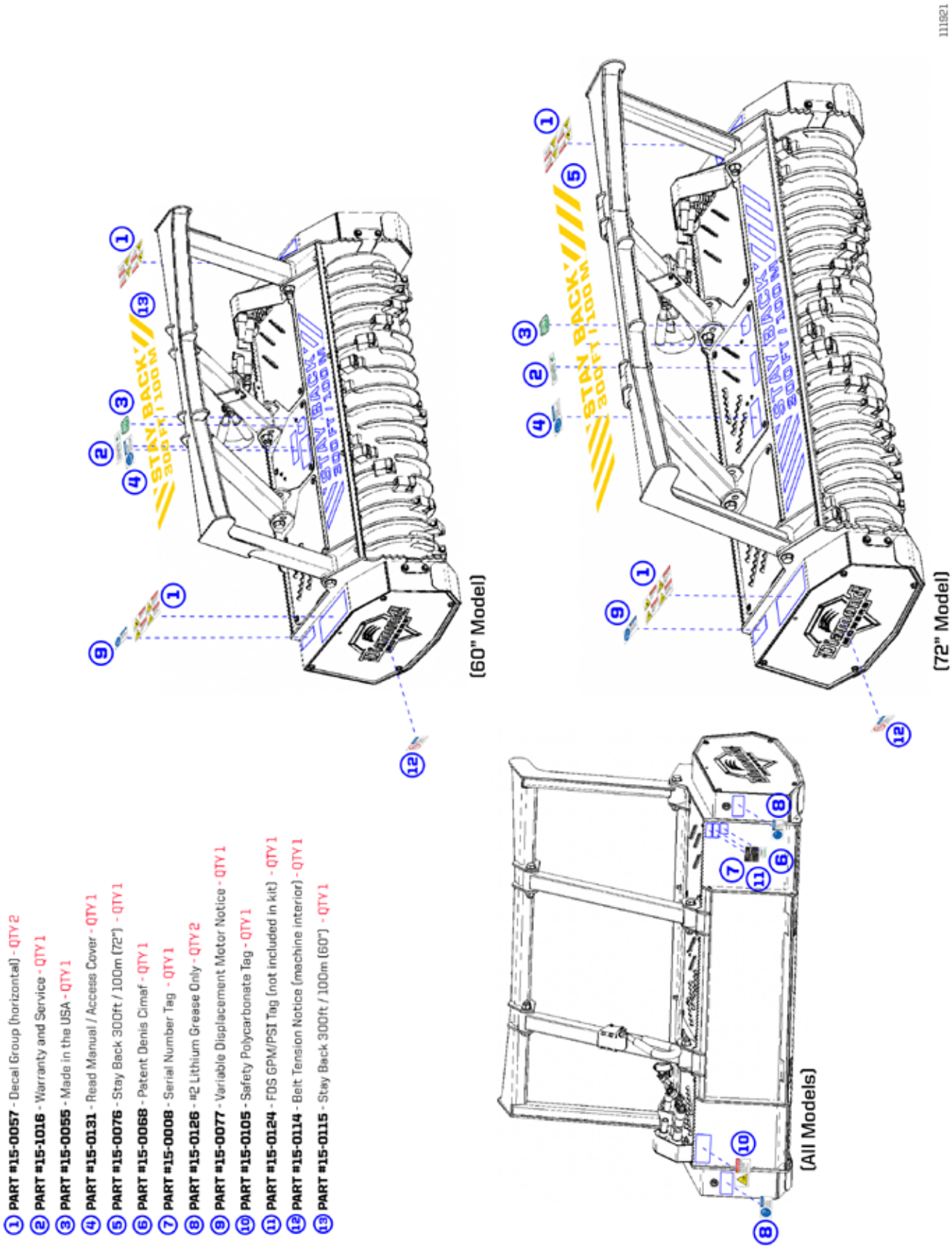

1. **PART #15-0057** - Decal Group (horizontal) - QTY 2
2. **PART #15-1016** - Warranty and Service - QTY 1
3. **PART #15-0055** - Made in the USA - QTY 1
4. **PART #15-0131** - Read Manual / Access Cover - QTY 1
5. **PART #15-0076** - Stay Back 300ft / 100m (72") - QTY 1
6. **PART #15-0068** - Patent Denis Cimaf - QTY 1
7. **PART #15-0008** - Serial Number Tag - QTY 1
8. **PART #15-0126** - #2 Lithium Grease Only - QTY 2
9. **PART #15-0077** - Variable Displacement Motor Notice - QTY 1
10. **PART #15-0105** - Safety Polycarbonate Tag - QTY 1
11. **PART #15-0124** - FDS GPM/PSI Tag (not included in kit) - QTY 1
12. **PART #15-0114** - Belt Tension Notice (machine interior) - QTY 1
13. **PART #15-0115** - Stay Back 300ft / 100m (60") - QTY 1

© Diamond Mowers®, LLC

APPENDIX

O-RINGS - S.A.E.

ORING (AS568) BOSS FITTINGS (KIT PART# 33-0122)

SAE SIZES

STANDARD ORING PART #	HYDRAULIC SIZE	ORING ID SAE (IN)	ORING WIDTH SAE (IN)	ORING MATERIAL
902	-2	0.24	0.06	90-durometer Nitrile
903	-3	0.30	0.06	90-durometer Nitrile
904	-4	0.35	0.07	90-durometer Nitrile
905	-5	0.41	0.07	90-durometer Nitrile
906	-6	0.47	0.08	90-durometer Nitrile
908	-8	0.64	0.09	90-durometer Nitrile
910	-10	0.76	0.1	90-durometer Nitrile
912	-12	0.92	0.12	90-durometer Nitrile
914	-14	1.05	0.12	90-durometer Nitrile
916	-16	1.17	0.12	90-durometer Nitrile
920	-20	1.48	0.12	90-durometer Nitrile
924	-24	1.72	0.12	90-durometer Nitrile
932	-32	2.34	0.12	90-durometer Nitrile

ORING (AS568) FLAT SEAL FITTINGS (KIT PART# 33-0123)

SAE SIZES & METRIC SIZES

STANDARD ORING PART #	HYDRAULIC SIZE	END SIZE SAE (IN)	END SIZE METRIC (MM)	ORING ID SAE (IN)	ORING ID METRIC (MM)	ORING WIDTH SAE (IN)	ORING WIDTH METRIC (MM)	ORING MATERIAL
011	-4	1/4	6	0.30	7.70	0.07	1.78	90-durometer Nitrile
012	-6	3/8	8, 10	0.36	9.30	0.07	1.78	90-durometer Nitrile
014	-8	1/2	12	0.49	12.40	0.07	1.78	90-durometer Nitrile
016	-10	5/8	14, 15, 16	0.61	15.60	0.07	1.78	90-durometer Nitrile
018	-12	3/4	18, 20	0.74	18.80	0.07	1.78	90-durometer Nitrile
020	-14	7/8	22	0.86	21.80	0.07	1.78	90-durometer Nitrile
021	-16	1	25	0.93	23.50	0.07	1.78	90-durometer Nitrile
025	-20	1 1/4	28, 30, 32	1.18	29.90	0.07	1.78	90-durometer Nitrile
029	-24	1 1/2	35, 38	1.49	37.80	0.07	1.78	90-durometer Nitrile
135	-32	2	50	1.93	490.00	0.10	2.54	90-durometer Nitrile

© Diamond Mowers®, LLC

APPENDIX

S.A.E. TORQUE SPECIFICATIONS

Nominal Dia. (in.)	threads per inch	Tensile Stress Area (sq. in.)	ASTM A307 Grade A				SAE J429 Grade 5				SAE J429 Grade 8				FNL Grade 9			
			Clamp Load (Lbs.)	Tightening Torque K = 0.15	Tightening Torque K = 0.17	Tightening Torque K = 0.20	Clamp Load (Lbs.)	Tightening Torque K = 0.15	Tightening Torque K = 0.17	Tightening Torque K = 0.20	Clamp Load (Lbs.)	Tightening Torque K = 0.15	Tightening Torque K = 0.17	Tightening Torque K = 0.20	Clamp Load (Lbs.)	Tightening Torque K = 0.15	Tightening Torque K = 0.17	Tightening Torque K = 0.20
Unified Coarse Thread Series																		
1/4	20	0.0318	859	32 in-lbs	37 in-lbs	43 in-lbs	2029	76 in-lbs	86 in-lbs	101 in-lbs	2864	107 in-lbs	122 in-lbs	143 in-lbs	3357	126 in-lbs	143 in-lbs	168 in-lbs
5/16	18	0.0524	1416	66	75	88	3342	157	178	209	4719	221	251	295	5531	259	294	346
3/8	16	0.0775	2092	10 ft-lbs	11 ft-lbs	13 ft-lbs	4940	23 ft-lbs	26 ft-lbs	31 ft-lbs	6974	33 ft-lbs	37 ft-lbs	44 ft-lbs	8174	38 ft-lbs	43 ft-lbs	51 ft-lbs
7/16	14	0.1063	2870	16	18	21	6777	37	42	49	9568	52	59	70	11214	61	70	82
1/2	13	0.1419	3831	24	27	32	9046	57	64	75	12771	80	90	106	14969	94	106	125
9/16	12	0.1819	4912	35	39	46	11599	82	92	109	16375	115	130	154	19193	135	153	180
5/8	11	0.2260	6102	48	54	64	14408	113	128	150	20340	159	180	212	23840	186	211	248
3/4	10	0.3345	9030	85	96	113	21322	200	227	267	30101	282	320	376	35281	331	375	441
7/8	9	0.4617	12467	136	155	182	29436	322	365	429	41556	455	515	606	48707	533	604	710
1	8	0.6057	16355	204	232	273	38616	483	547	644	54517	681	772	909	63899	799	905	1065
1 1/4	7	0.9691	26166	409	463	545	53786	840	952	1121	87220	1363	1545	1817	102229	1597	1810	2130
1 1/2	6	1.4053	37942	711	806	949	77991	1462	1657	1950	126473	2371	2688	3162	148237	2779	3150	3706
Fine Thread Series																		
1/4	28	0.0364	982	37 in-lbs	42 in-lbs	49 in-lbs	2319	87 in-lbs	99 in-lbs	116 in-lbs	3274	123 in-lbs	139 in-lbs	164 in-lbs	3837	144 in-lbs	163 in-lbs	192 in-lbs
5/16	24	0.0581	1568	73	83	98	3702	174	197	231	5226	245	278	327	6125	287	325	383
3/8	24	0.0878	2371	11 ft-lbs	13 ft-lbs	15 ft-lbs	5599	26 ft-lbs	30 ft-lbs	35 ft-lbs	7905	37 ft-lbs	42 ft-lbs	49 ft-lbs	9265	43 ft-lbs	49 ft-lbs	58 ft-lbs
7/16	20	0.1187	3205	18	20	23	7568	41	47	55	10684	58	66	78	12523	68	78	91
1/2	20	0.1600	4319	27	31	36	10197	64	72	85	14396	90	102	120	16873	105	120	141
9/16	18	0.2030	5480	39	44	51	12940	91	103	121	18268	128	146	171	21412	151	171	201
5/8	18	0.2560	6911	54	61	72	16317	127	144	170	23036	180	204	240	27000	211	239	281
3/4	16	0.3730	10070	94	107	126	23776	223	253	297	33566	315	357	420	39343	369	418	492
7/8	14	0.5095	13756	150	171	201	32479	355	403	474	45853	502	568	669	53743	588	666	784
1	14	0.6799	18357	229	260	306	43343	542	614	722	61190	765	867	1020	71720	896	1016	1195
1 1/4	12	1.0729	28970	453	513	604	59548	930	1055	1241	96565	1509	1710	2012	113182	1768	2004	2358
1 1/2	12	1.5810	42688	800	907	1067	87747	1645	1865	2194	142292	2668	3024	3557	166778	3127	3544	4169

The torque values can only be achieved if nut (or tapped hole) has a proof load greater than or equal to the bolt's minimum ultimate tensile strength.
Clamp load calculated as 75% of the proof load when specified by the standard. ASTM A307 utilized 75% of 36,000 PSI.
Torque values for 1/4 and 5/16-in series are in inch-pounds. All other torque values are in foot-pounds.
Torque values calculated from formula T=KDF, where

K = 0.15 for "lubricated" conditions
K = 0.17 for zinc plated and dry conditions; we have also found various forms of customer applied thread lockers to have a similar K value.
K = 0.20 for plain and dry conditions
D = Nominal Diameter
F = Clamp Load

Note: When using Zinc Plated (lubricated with wax) Top Lock Nuts, the K value can vary between 0.12-0.16

METRIC TORQUE SPECIFICATIONS

Nominal Dia. (mm)	Pitch	Class 4.6				Class 8.8				Class 10.9				Class 12.9			
		Clamp Load (lbs)	Tightening Torque Lubricated (ft-lbs)	Tightening Torque Zinc Plated (ft-lbs)	Tightening Torque Plain&Dry (ft-lbs)	Clamp Load (lbs)	Tightening Torque Lubricated (ft-lbs)	Tightening Torque Zinc Plated (ft-lbs)	Tightening Torque Plain&Dry (ft-lbs)	Clamp Load (lbs)	Tightening Torque Lubricated (ft-lbs)	Tightening Torque Zinc Plated (ft-lbs)	Tightening Torque Plain&Dry (ft-lbs)	Clamp Load (lbs)	Tightening Torque Lubricated (ft-lbs)	Tightening Torque As-Received (ft-lbs)	Tightening Torque Plain&Dry (ft-lbs)
4	0.7	333	0.7	0.7	0.9	858	1.7	1.9	2.3	1228	2.4	2.7	3.2	1436	2.8	3.2	3.8
5	0.8	538	1.3	1.5	1.8	1387	3.4	3.9	4.5	1985	4.9	5.5	6.5	2319	5.7	6.5	7.6
6	1	763	2.3	2.6	3.0	1968	5.8	6.6	7.7	2816	8.3	9.4	11.1	3291	9.7	11.0	13.0
7	1	1095	3.8	4.3	5.0	2822	9.7	11.0	13.0	4039	13.9	15.8	18.5	4720	16.3	18.4	21.7
8	1.25	1389	5.5	6.2	7.3	3580	14.1	16.0	18.8	5123	20.2	22.9	26.9	5987	23.6	26.7	31.4
10	1.5	2200	10.8	12.3	14.4	5671	27.9	31.6	37.2	8115	39.9	45.2	53.2	9484	46.7	52.9	62.2
12	1.75	3197	18.9	21.4	25.2	8240	48.7	55.1	64.9	11792	69.6	78.9	92.8	13781	81.4	92.2	108.5
14	2	4379	30.2	34.2	40.2	11289	77.8	88.1	103.7	16154	111.3	126.1	148.4	18879	130.0	147.4	173.4
16	2	5943	47	53	62	15320	121	137	161	21924	173	196	230	25622	202	229	269
18	2.5	7301	65	73	86	18822	167	189	222	26934	239	270	318	31477	279	316	372
20	2.5	9286	91	104	122	23938	236	267	314	34256	337	382	449	40034	394	446	525
22	2.5	11509	125	141	166	29669	321	364	428	42457	460	521	613	49619	537	609	716
24	3	13372	158	179	211	34471	407	461	543	49329	582	660	777	57649	681	771	908
27	3	17428	232	262	309	44924	597	676	796	64288	854	968	1139	75132	998	1131	1331
30	3.5	21266	314	356	419	54819	809	917	1079	78448	1158	1312	1544	91680	1353	1534	1804
33	3.5	26310	427	484	570	67821	1101	1248	1468	97055	1576	1786	2101	113425	1842	2087	2455
36	4	30982	549	622	732	79866	1415	1603	1886	114291	2024	2294	2699	133569	2366	2681	3154

The torque values can only be achieved if nut (or tapped hole) has a proof load greater than or equal to the bolt's minimum ultimate tensile strength.
Clamp loads estimated as 75% of proof load for specified bolts.
Torque values listed in foot-pounds .
Torque values calculated from formula T=KDF where; K=0.15 for "lubricated" condition, K=0.17 for zinc plated and dry condition (or as-received for the 12.9), K=0.20 for plain and dry condition

© Diamond Mowers®, LLC

(This Page Is Intentionally Left Blank)

DEMAND
BRILLIANCE

DIAMONDMOWERS.COM

211119