PARTS BOOK

EXCAVATOR FORESTRY DISC

48"(1219MM) FORESTRY DISC HEAD

DOC #15-1353 SERIAL #30114+

WARRANTY + SERVICE 888.960.0364
PARTS 888.960.0361

Diamond MOWERS™

DIAMONDMOWERS.COM

TABLE OF CONTENTS

FORESTRY HEADS

DECK ASSEMBLY 4
CUTTING HEAD - DECK SUBASSEMBLY 6
GRAPPLE PLATE - DECK SUBASSEMBLY 7
MOTOR - DECK SUBASSEMBLY 8
SPINDLE - DECK SUBASSEMBLY 9
DECAL ASSEMBLY 10

DECK ASSEMBLIES

MOTOR ASSEMBLY - 30-0515 12
MOTOR ASSEMBLY - 30-0518 13
MOTOR ASSEMBLY - 30-0524 14
SPINDLE ASSEMBLY - 35-0088 15
SPINDLE REPAIR KIT - 44-0952 16

APPENDIX

O-RINGS - S.A.E. 18
S.A.E. TORQUE SPECIFICATIONS 19
METRIC TORQUE SPECIFICATIONS 19

FORESTRY HEADS

DECK ASSEMBLY

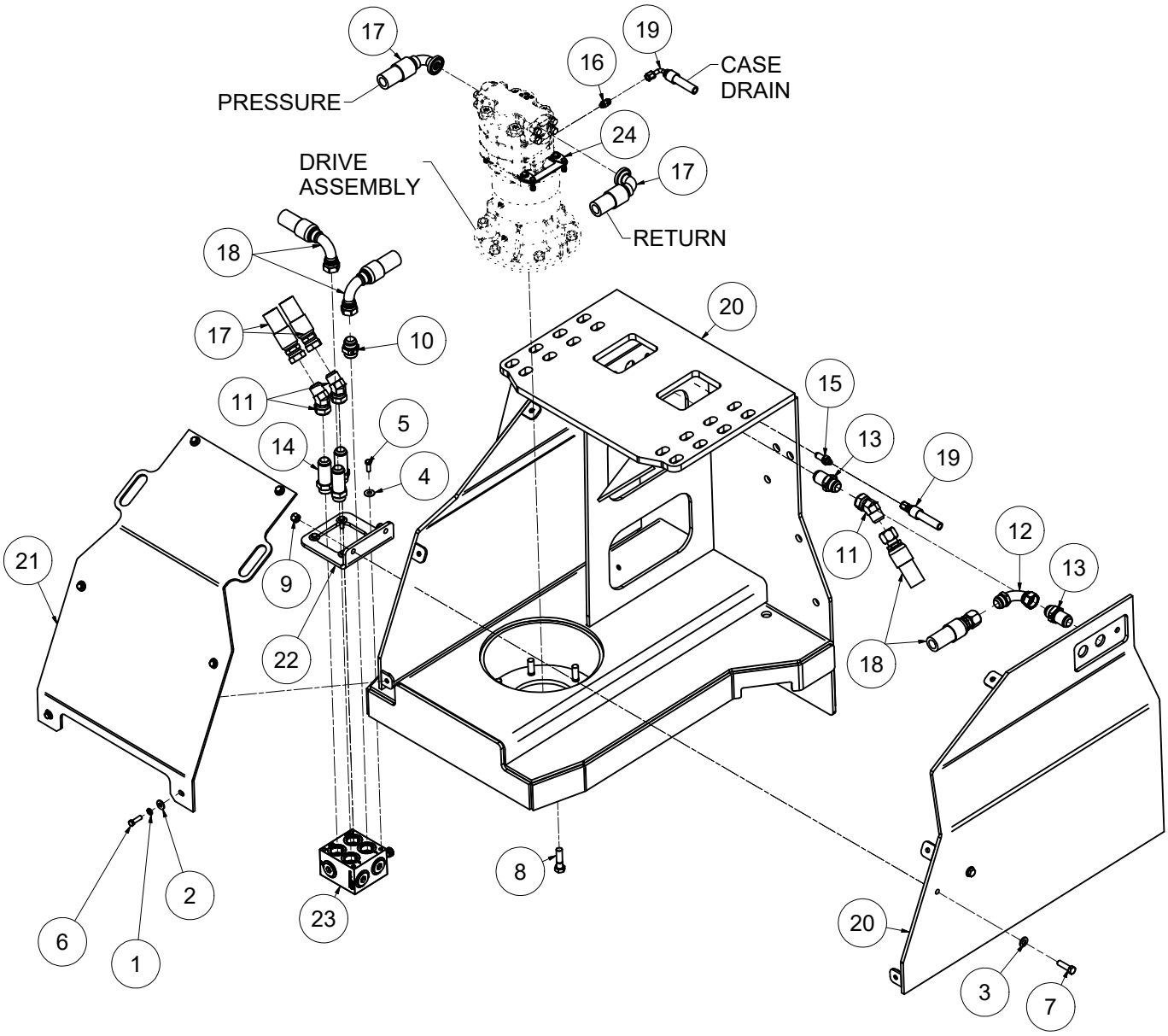

25-1531-1	Rev H

© Diamond Mowers®, LLC

DECK ASSEMBLY

REF#	PARTS DESCRIPTION	REQ	PART#	TORQUE (ft-lbs)
1	3/8 LOCK WASHER, MECHANICAL ZINC	6	11-0005	
2	3/8 X 1 LOW CARBON FLAT WASHER, ZINC	6	11-0009	
3	1/2 X 1.062 GR 8 SAE FLAT WASHER, YELLOW ZINC	4	11-0042	
4	3/8 THRU-HARDENED FLAT WASHER, YELLOW ZINC	4	11-0092	
5	3/8-16 X 1 GR 5 HEX CAP, ZINC	4	11-0532	31
6	3/8-16 X 1-1/4 GR 5 HEX CAP, ZINC	6	11-0533	31
7	1/2-13 X 1-3/4 GR 5 HEX CAP, ZINC	2	11-0535	75
8	5/8-18 X 2 1/4 GR 8 HEX CAP, YELLOW ZINC	12	11-0691	240
9	1/2-13 GR 5 NYLOCK NUT, ZINC	2	11-1018	
10	1MOR X 1MJIC, ADAPTER	1	21-1005	
11	16MJ X 16FJX - 45DEG	3	21-1145	
12	1MJIC X 1FJIC-90DEG, FITTING 3-3/4	1	21-1258	
13	1MJIC X 1MJIC BULKHEAD ADAPTER	2	21-1283	
14	1MOR X 1MJIC ADAPTER, LONG	3	21-1457	
15	BULKHEAD, 3/8MJIC X 3/8MJIC	1	21-1581	
16	ADAPTER, 1/4MOR X 3/8MJIC	1	21-1597	
17	HOSE 1 X 57 (#20FLG-90 X 1FJ)	2	21-2517	
18	HOSE 1 X 35 (1FJIC X 1FJIC-90DEG)	2	21-3920	
19	HOSE 3/8 X 50 (3/8FJIC X 3/8FJIC-90DEG)	1	21-4293	
20	48" FORESTRY BRUSH CUTTER	1	25-0186	
21	48" FORESTRY BRUSH CUTTER COVER	1	31-0435	
22	EXCAVATOR MANIFOLD MNT 48 FBE	1	31-0771	
23	MANIFOLD, ANTI-CAVITATION, 3050 PSI RELIEF	1	39-0123	
24	MOTOR BOLT LOCKING KIT	1	44-0734	

** CRITICAL TORQUE VALUES **MUST** BE FOLLOWED.

25-1531-1	Rev H

CUTTING HEAD - DECK SUBASSEMBLY

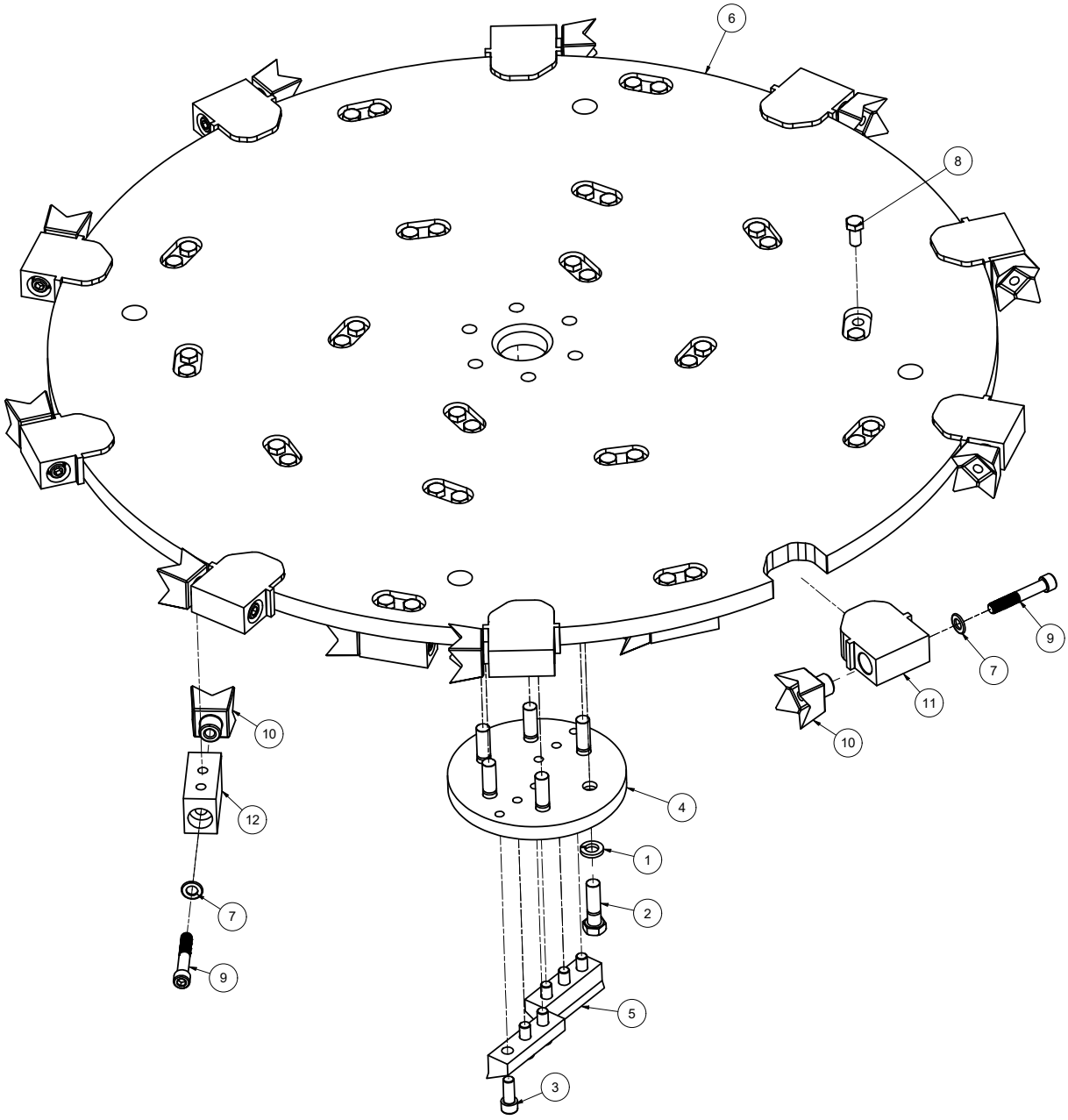

REF#	PARTS DESCRIPTION	REQ	PART#	TORQUE (ft-lbs)	TORQUE (Nm)
1	5/8" LOCK WASHER GR 8	12	11-0043		
2	NF Hex Cap 5-8, 0.625 x 2.25	12	11-0691	LOCTITE, 170	LOCTITE 230.5
3	1/2 X 1-1/4 NC SHCS	6	11-0965	124.2	168.4
4	FBC, BOLT PROTECTOR	1	24-0191		
5	FBC, CENTER PLANER	2	24-0192		
6	48IN FORRESTRY DISH COMPLETE	1	24-0244		
7	1/2" SAE FLAT WASHER GR 8	28	11-0042		
8	1/2 X 1 NF HEX CAP GR 5	36	11-0639		
9	1/2 X 3 NF SHCS	28	11-0929	120	163
10	STEEL CUTTING TOOTH	28	22-0019		
11	TOOTH HOLDER SERIAL #16510 AND UP	10	90-7036		
11	TOOTH HOLDER SERIAL #16509 AND DOWN	10	P24-0186-12		
12	TOOTH HOLDER SERIAL #16510 AND UP	18	90-7035		
12	TOOTH HOLDER SERIAL #16509 AND DOWN	18	90-7034		

25-1531-2	Rev D

NOTE: THE ABOVE SPECIFIED TORQUE VALUES **MUST** BE FOLLOWED.

© Diamond Mowers®, LLC

GRAPPLE PLATE - DECK SUBASSEMBLY

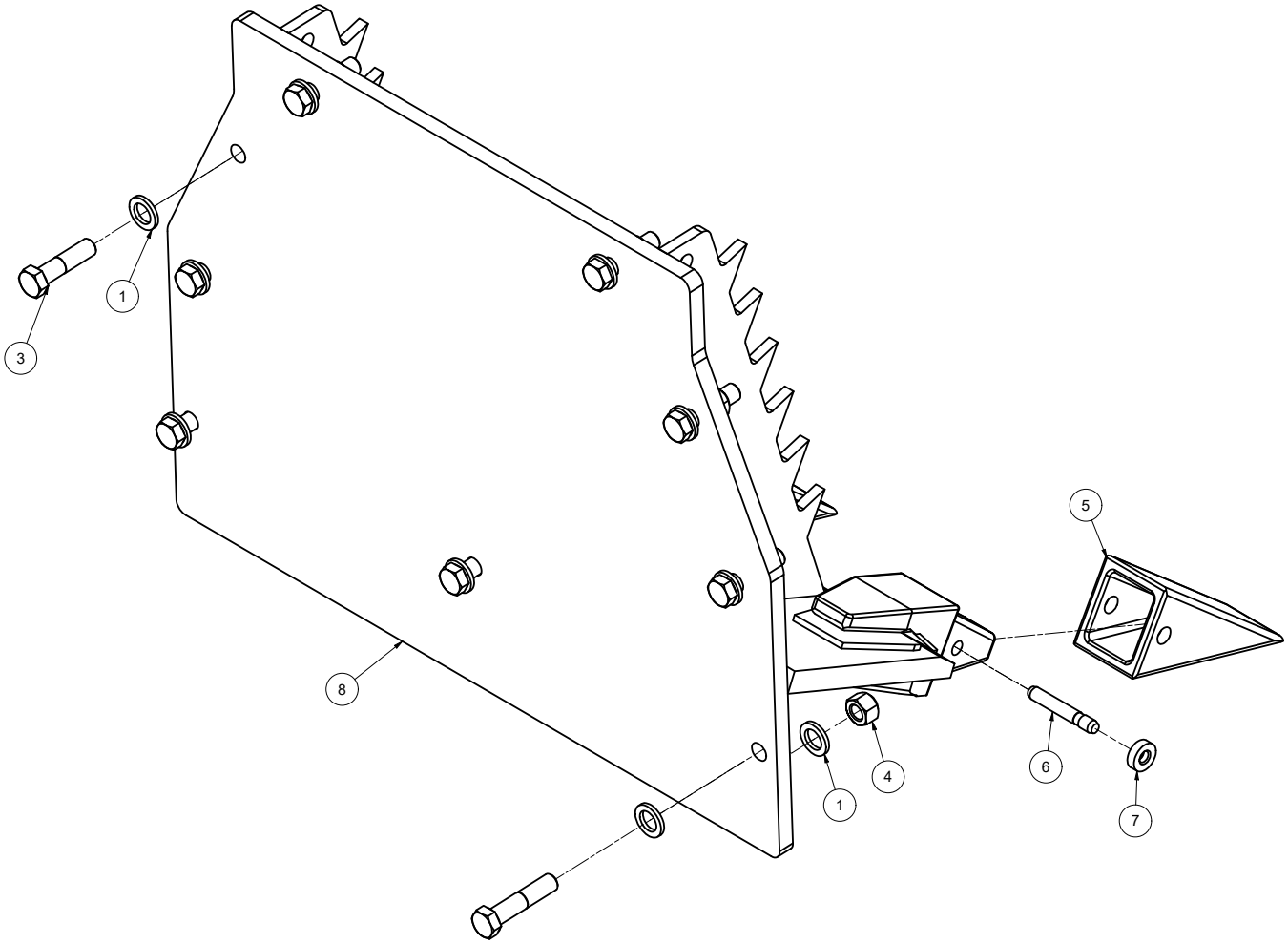

REF#	PARTS DESCRIPTION	REQ	PART#	TORQUE (ft-lbs)	TORQUE (Nm)
1	3/4" SAE FLAT WASHER GR 8 YELLOW	18	11-0039		
2	.75 X 3.5 H.S. NC HEX CAP	3	11-0792	376	510
3	.75 X 3 H.S. NC HEX CAPSCREW	6	11-0900	376	510
4	.75 H.S. NC STOVER NUT	9	11-1038		
5	EXCAVATOR BUCKET SHORT TOOTH	3	3000-21		
6	EXCAVATOR BUCKET TOOTH PIN	3	3000-22		
7	EXCAVATOR BUCKET TOOTH RETAINING WASHER W/SLEEVE	3	3000-23		
8	FORESTRY BRUSH CUTTER GRAPPLE	1	49-0073		

44-0323	Rev 000

NOTE: THE ABOVE SPECIFIED TORQUE VALUES **MUST** BE FOLLOWED.

MOTOR - DECK SUBASSEMBLY

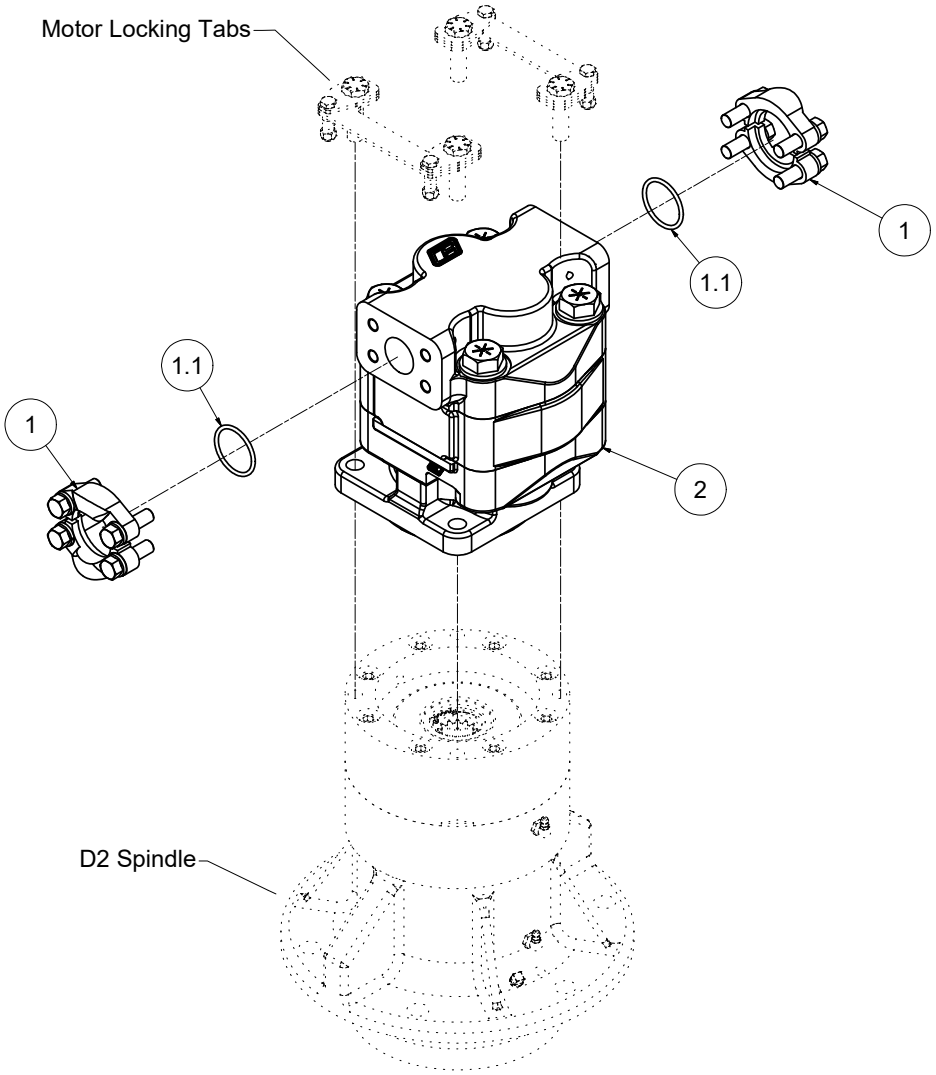

REF#	PARTS DESCRIPTION	REQ	PART#	TORQUE (ft-lbs)
1	#20 FLANGE KIT	2	21-2105	49
1.1	0-RING, #20 FLANGE	2	33-0013	
2	MOTOR	1		
	FORESTRY DISC EXCAVATOR 36"			
	M365 1" GEAR SET SPLINED SHAFT		30-0514	
	24-28 GPM (91-106 LPM)			
	M365 1-1/4" GEAR, 1-1/4 14 SPLINE SHAFT		30-0532	
	29-32 GPM (110-121 LPM)			
	FORESTRY DISC EXCAVATOR 48"			
	M365 1-1/2 GEAR 14 SPLINE MOTOR		30-0515	
	30-40 GPM (113-152 LPM)			
	M365 2-1/4" GEAR, 1-1/4 14 SPLINE SHAFT, HD HOUSING		30-0524	
	41-50 GPM (155-190 LPM)			
	M365 MOTOR, 2-1/2" GEAR SET SPLINED SHAFT		30-0518	
	51-58 GPM (193-220 LPM)			

30-0514-3	Rev 000

© Diamond Mowers®, LLC

SPINDLE - DECK SUBASSEMBLY

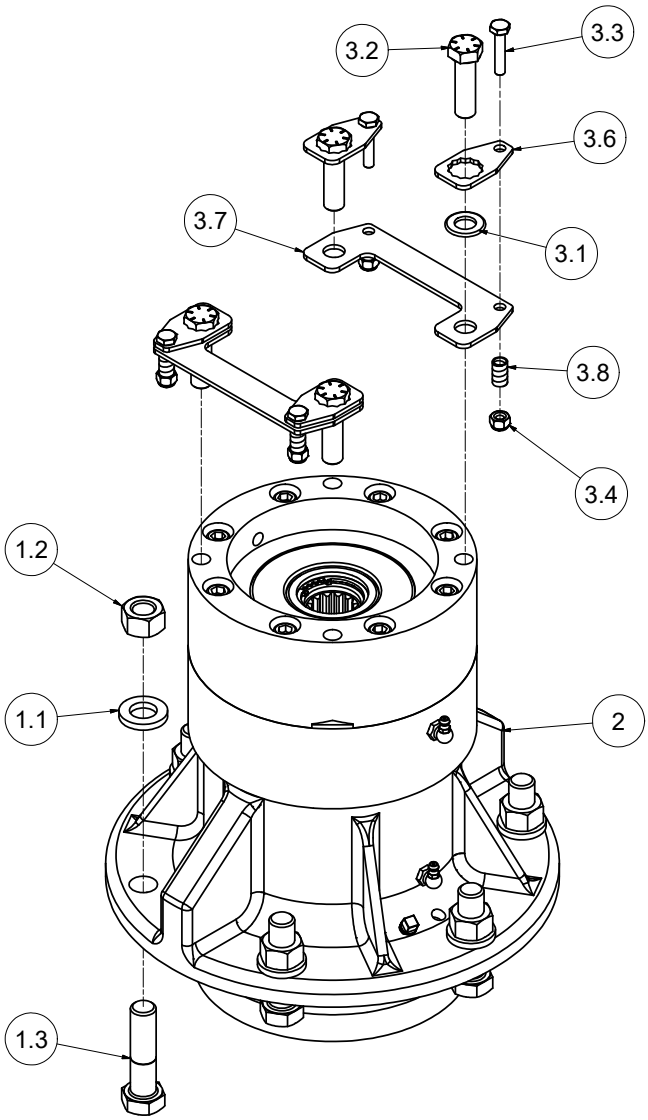

REF#	PARTS DESCRIPTION	REQ	PART#	TORQUE (ft-lbs)
1	BOLT KIT - SPINDLE 2-1/2" BOLT D2 SHELL	1	11-3626	
1.1	M16 DIN EN 14399 THRU-HARDENED FW, ECOGUARD	6	11-0102	
1.2	5/8-11 GR 8 HEX NUT, ECOGUARD	6	11-1166	
1.3	5/8-11 X 2.5 GR 8 HEX CAP, ECOGUARD	6	11-2233	150
2	SPINDLE ASSY, SPLINED INSERT	1	35-0088	
3	MOTOR BOLT LOCKING KIT	1	44-0734	
3.1	1/2 X 1.062 GR 8 SAE FLAT WASHER, YELLOW ZINC	4	11-0042	
3.2	1/2-20 X 1-3/4 GR 8 HEX CAP, YELLOW ZINC	4	11-0664	120
3.3	1/4-20 X 1-1/4 GR 5 HEX CAP, ZINC	4	11-0702	8.5
3.4	1/4-20 GR 5 NYLOCK NUT, ZINC	4	11-1022	
*3.5	SPINDLE HARDWARE WARNING TAG	1	15-0099	
3.6	MOTOR BOLT LOCK TAB	4	31-0503	
3.7	V3LOCK BOTTOM	2	31-0504	
3.8	BOLT LOCKING TAB SPRING	4	36-0013	

* NOTE: FLAT SIDE OF WASHERS TOWARDS HARDWARE.
CHAMFER SIDE TOWARDS SPINDLE & DECK.

* NOT SHOWN

35-0088-1	Rev 000

© Diamond Mowers®, LLC

DECAL ASSEMBLY

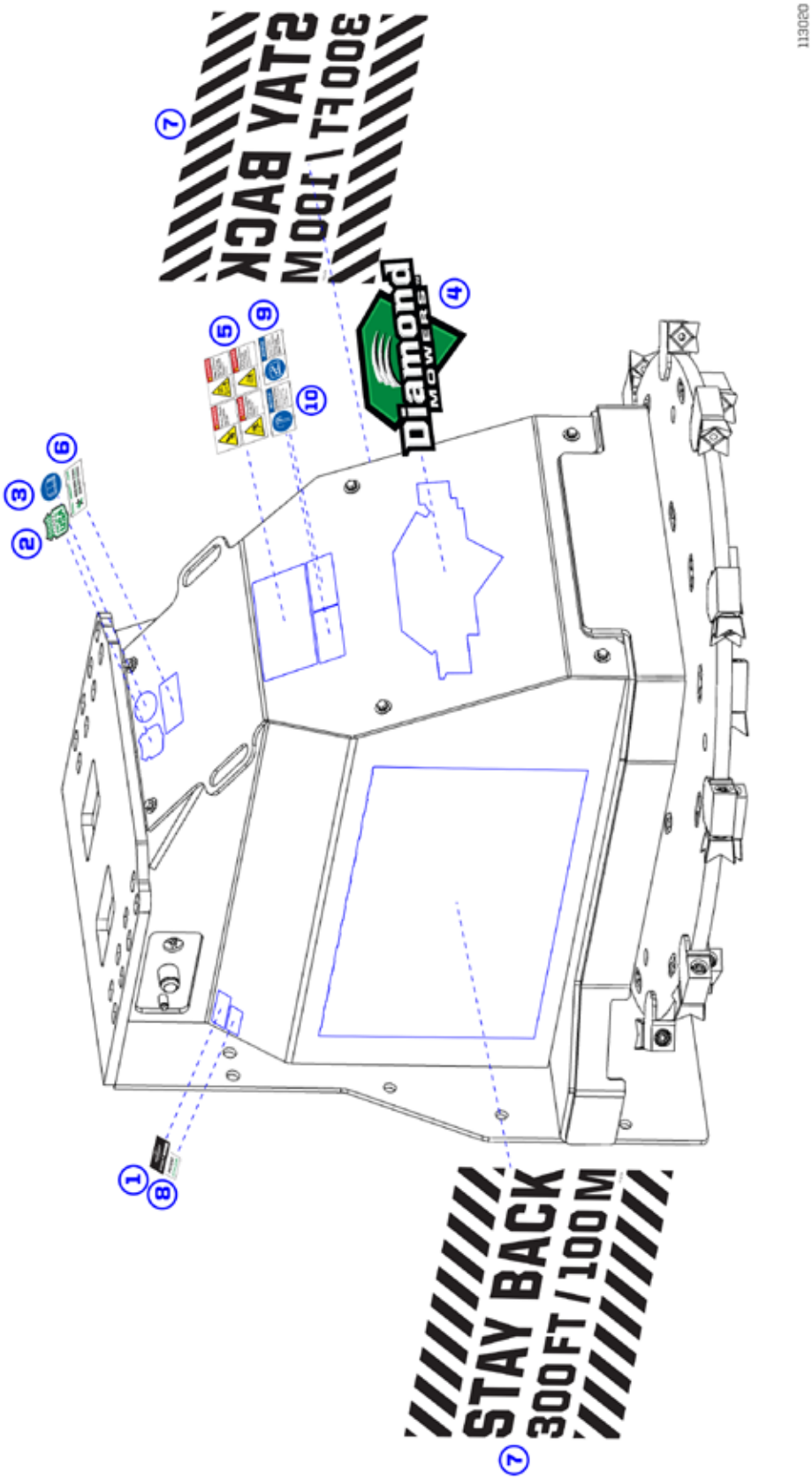

1. **SERIAL NUMBER LABEL** - (not included in kit) - QTY 1
2. **PART #15-0055** - Made In USA - QTY 1
3. **PART #15-0058** - Read Manual - QTY 1
4. **PART #15-0054** - Diamond Mowers Logo 15" - QTY 1
5. **PART #15-0057** - Decal Group Horizontal - QTY 1
6. **PART #15-1016** - Warranty - QTY 1
7. **PART #15-0112** - Stay Back 300'/100m - QTY 2
8. **PART #15-0066** - Patent - QTY 1
9. **PART #15-0101** - Spindle/Motor Hardware - QTY 1
10. **PART #15-0030** - D2 Spindle Grease Notice - QTY 1

© Diamond Mowers®, LLC

DECK ASSEMBLIES

MOTOR ASSEMBLY - 30-0515

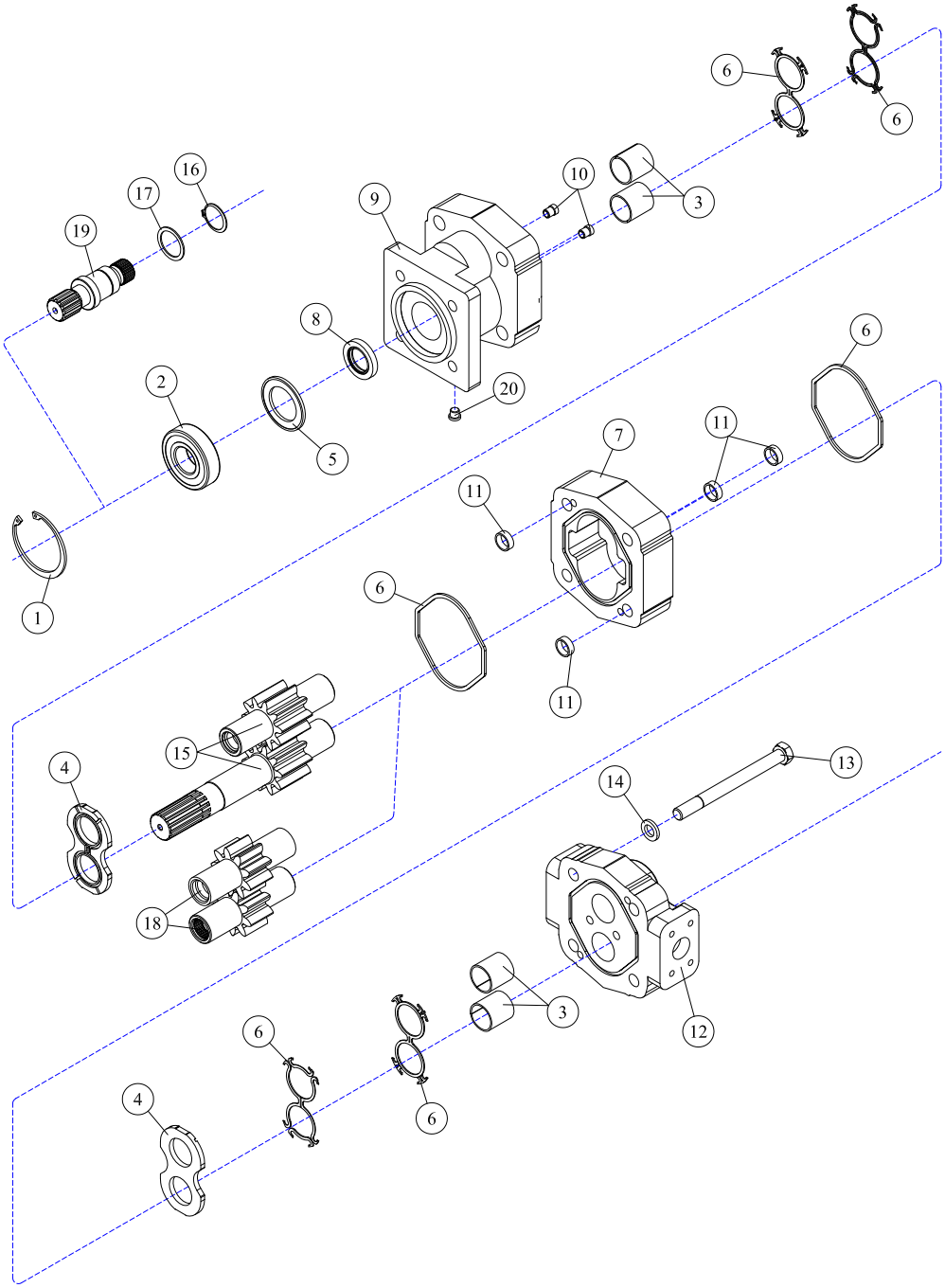

REF#	PARTS DESCRIPTION	REQ	PART #
1	SNAP RING	1	30-1009
2	OUTBOARD BEARING	1	30-1010
3	BUSHING	4	30-1011
4	THRUST PLATE	2	30-1012
5	SEAL RETAINER	1	30-1017
6	M365 SEAL KIT	Avail	30-1021
7	GEAR HOUSING	1	30-1023
8	**SHAFT SEAL**		
	150 PSI (included in M365 seal kit)	1	30-1210
	500 PSI	1	30-1156
9	SHAFT END COVER	1	30-1086
10	CHECK ASSEMBLY	2	30-1087
11	ALIGNMENT BUSHING	4	30-1090

REF#	PARTS DESCRIPTION	REQ	PART #
12	PORT END COVER	1	30-1091
13	STUD	4	30-1092
14	WASHER	4	30-1093
	GEAR SET OPTION A:		
15	1-1/2" GEAR SET	1	30-1159
	GEAR SET OPTION B:		
16	RETAINING RING	1	30-1019
17	WASHER	1	30-1020
18	1-1/2" GEAR SET	1	30-1022
19	CONTINENTAL SHAFT, SPLINED	1	30-1144
20	PLUG	1	30-1096
*	SEAL APPLICATOR TOOL (not shown)	Avail	30-1048

© Diamond Mowers®, LLC

MOTOR ASSEMBLY - 30-0518

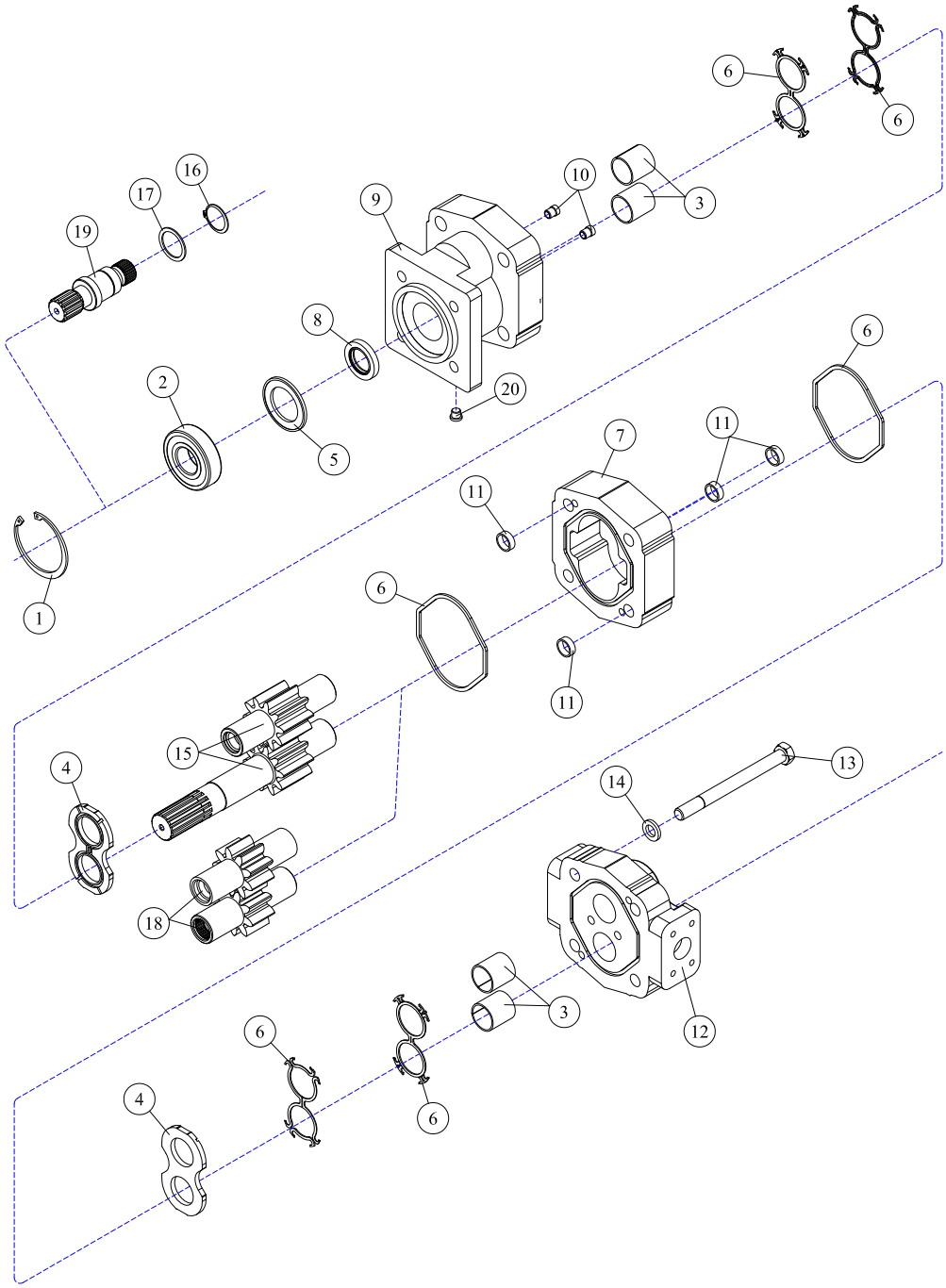

REF#	PARTS DESCRIPTION	REQ	PART #
1	SNAP RING	1	30-1009
2	OUTBOARD BEARING	1	30-1010
3	BUSHING	4	30-1011
4	THRUST PLATE	2	30-1012
5	SEAL RETAINER	1	30-1017
6	M365 SEAL KIT	Avail	30-1021
7	2-1/2" M365 GEAR HOUSING	1	30-1137
8	**SHAFT SEAL**		
	150 PSI (included in M365 seal kit)	1	30-1210
	500 PSI	1	30-1156
9	SHAFT END COVER	1	30-1086
10	CHECK ASSEMBLY	2	30-1087
11	ALIGNMENT BUSHING	4	30-1090

REF#	PARTS DESCRIPTION	REQ	PART #
12	PORT END COVER	1	30-1091
13	STUD	4	30-1334
14	WASHER	4	30-1093
	GEAR SET OPTION A:		
15	2-1/2" GEAR SET	1	30-1170
	GEAR SET OPTION B:		
16	RETAINING RING	1	30-1019
17	WASHER	1	30-1020
18	2-1/2" GEAR SET	1	30-1136
19	CONTINENTAL SHAFT, SPLINED	1	30-1144
20	PLUG	1	30-1096
*	SEAL APPLICATOR TOOL (not shown)	Avail	30-1048

MOTOR ASSEMBLY - 30-0524

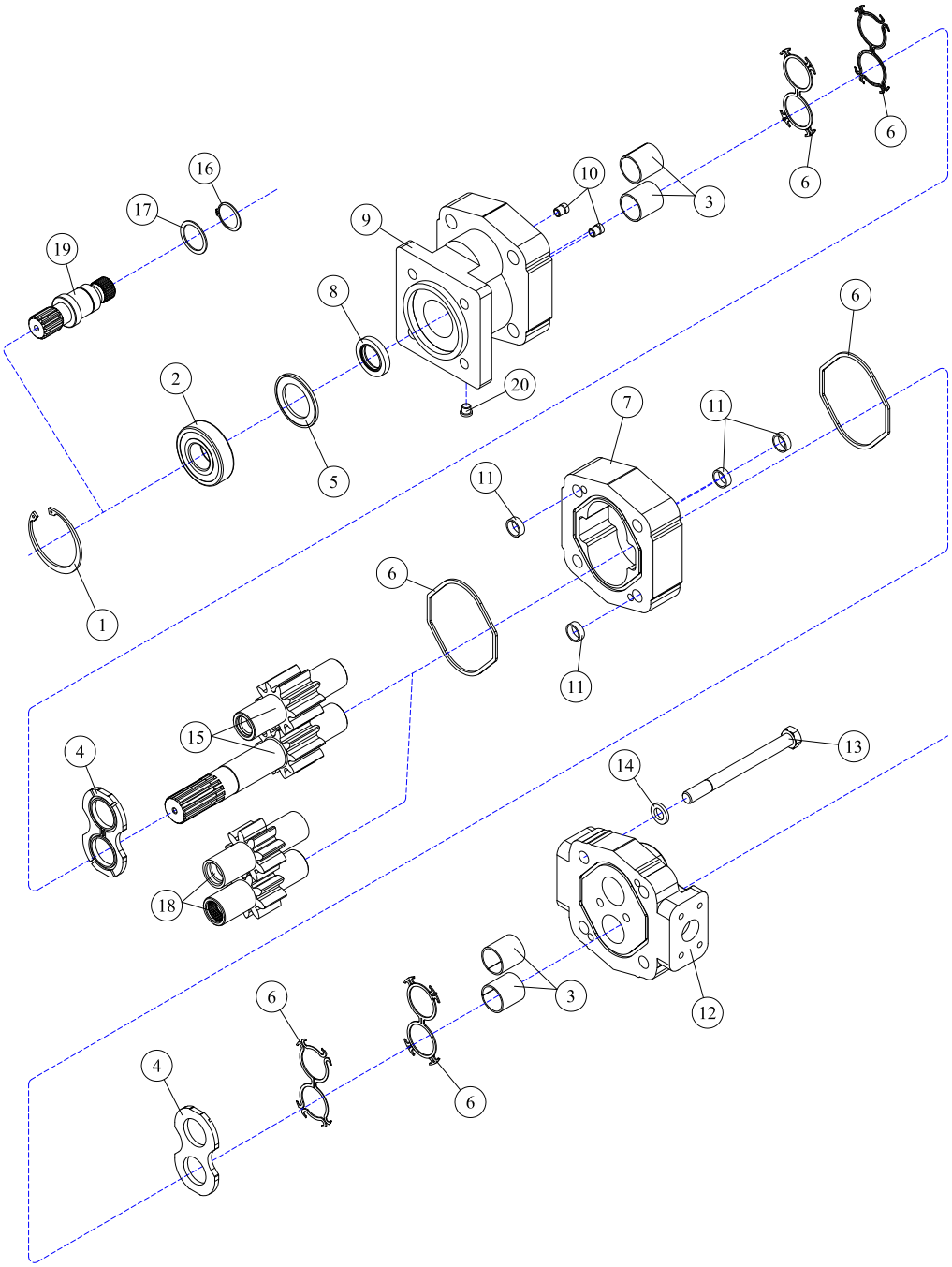

REF#	PARTS DESCRIPTION	REQ	PART #
1	SNAP RING	1	30-1009
2	OUTBOARD BEARING	1	30-1010
3	BUSHING	4	30-1011
4	THRUST PLATE	2	30-1012
5	SEAL RETAINER	1	30-1017
6	M365 SEAL KIT	Avail	30-1021
7	2-1/4" M365 GEAR HOUSING	1	30-1026
8	**SHAFT SEAL**		
	150 PSI (included in M365 seal kit)	1	30-1210
	500 PSI	1	30-1156
9	SHAFT END COVER	1	30-1086
10	CHECK ASSEMBLY	2	30-1087
11	ALIGNMENT BUSHING	4	30-1090

REF#	PARTS DESCRIPTION	REQ	PART #
12	PORT END COVER	1	30-1091
13	STUD	4	Call
14	WASHER	4	30-1093
	GEAR SET OPTION A:		
15	2-1/4" GEAR SET	1	30-1165
	GEAR SET OPTION B:		
16	RETAINING RING	1	30-1019
17	WASHER	1	30-1020
18	2-1/4" GEAR SET	1	30-1025
19	CONTINENTAL SHAFT, SPLINED	1	30-1144
20	PLUG	1	30-1096
*	SEAL APPLICATOR TOOL (not shown)	Avail	30-1048

© Diamond Mowers®, LLC

SPINDLE ASSEMBLY - 35-0088

Grease with #2 lithium based grease every 500hrs. Use 10 pumps (.44oz) into each of the two grease zerks.

Warning: Do not overgrease
Overgreasing will cause damage or premature failure of the bearings, housing & seals.

REF#	PARTS DESCRIPTION	REQ	PART #
1	BEARING	2	10-0055
2	LOCKING WASHER	1	11-0048
3	3/8 X 2-3/4 NC SKT HEAD CAPSCREW	8	11-0703
4	1/4 X 1/2 NC CAPSCREW	4	11-0741
5	2-1/2 SPANNER NUT	1	11-1037
6	LARGE SNAP RING	1	11-2021
7	SMALL SNAP RING	1	11-2022
8	PIPE PLUG	1	21-1136
9	1/8 X 90 GREASE ZERK	2	23-0005
10	UPPER SEAL	1	33-0035
11	LOWER SEAL	1	33-0057
12	SPINDLE HOUSING	1	35-0021
13	SEAL/MOTOR MOUNT	1	35-0022
14	ALIGNMENT PIN	2	35-0032
15	SPACER	1	35-0050
16	BOTTOM SEAL PLATE	1	35-0063
17	SPACER	1	35-0064
18	BOTTOM PLATE	1	35-0065
19	GREASE CATCH	1	35-0066
20	SPINDLE SHAFT COMPLETE	1	35-0090
*21	SPLINED INSERT KIT	1	35-0091
22	BREATHER	2	80-1016
23	3/8 LOCK WASHER GR 5	8	11-0005

* The splined insert kit includes the insert removal tool 11-0913.

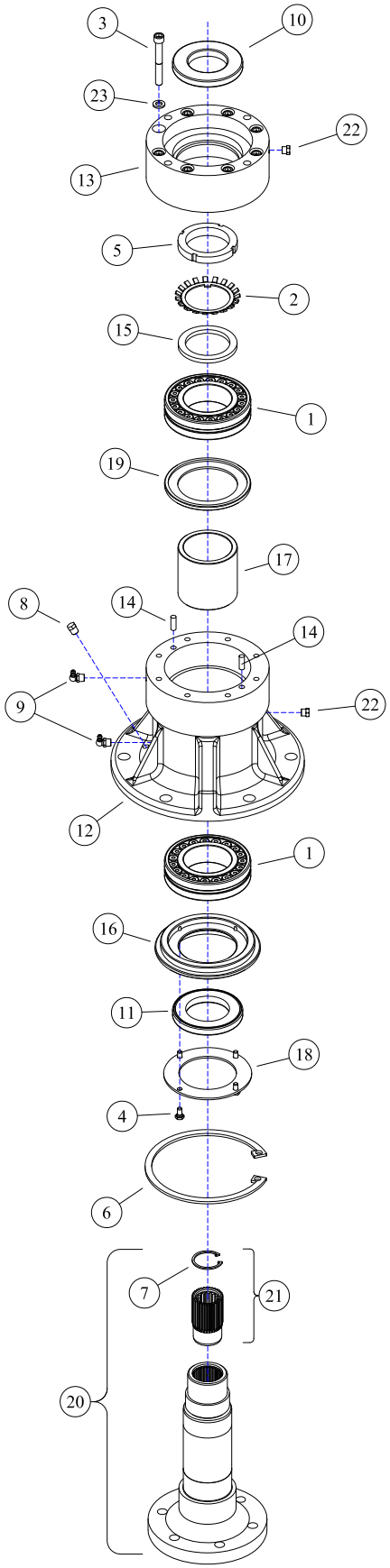

SPINDLE REPAIR KIT - 44-0952

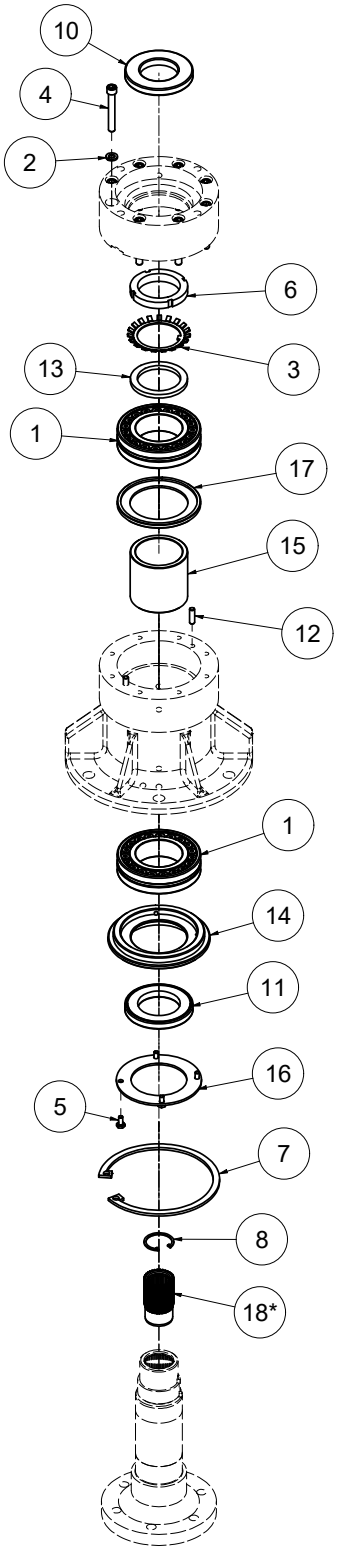

REF#	PARTS DESCRIPTION	REQ	PART#
1	SPINDLE BEARING	2	10-0055
2	3/8 LOCK WASHER, MECHANICAL ZINC	8	11-0005
3	LOCKING WASHER HD SPINDLE	1	11-0048
4	3/8-16 X 2-3/4 ASTM A574 SOCKET CAP, BLACK OXIDE	8	11-0703
5	1/4-20 X 1/2 GR 5 HEX CAP, ZINC	4	11-0741
6	2-1/2 SPANNER NUT, HD SPINDLE	1	11-1037
7	SNAP RING SPINDLE 6" INTERNAL	1	11-2021
8	1-3/4 INTERNAL SNAP RING HD SPINDLE	1	11-2022
9	BULLITEN - D2 SPINDLE REBUILD INSTRUCTIONS	1	15-2003
10	UPPER SEAL, HD SPINDLE 2.25 X 4.003 X .468	1	33-0035
11	SHAFT SEAL 4.008 OD X 3.250 ID X .468 W	1	33-0057
12	5/16 ALIGNMENT PIN, HD SPINDLE	2	35-0032
13	HD NUT LOCK SPACER 1/4" HR A36	1	35-0050
14	D2 BOTTOM SEAL PLATE	1	35-0063
15	D2 SPINDLE SPACER	1	35-0064
16	D2 BOTTOM PLATE	1	35-0065
17	D2 GREASE CATCH 1/4" A36	1	35-0066
18*	SPINDLE INSERT KIT	1	35-0091

*The splined insert kit includes the insert removal tool 11-0913

44-0952	Rev A

© Diamond Mowers®, LLC

APPENDIX

O-RINGS - S.A.E.

ORING (AS568) BOSS FITTINGS (KIT PART# 33-0122)

SAE SIZES

STANDARD ORING PART #	HYDRAULIC SIZE	ORING ID SAE (IN)	ORING WIDTH SAE (IN)	ORING MATERIAL
902	-2	0.24	0.06	90-durometer Nitrile
903	-3	0.30	0.06	90-durometer Nitrile
904	-4	0.35	0.07	90-durometer Nitrile
905	-5	0.41	0.07	90-durometer Nitrile
906	-6	0.47	0.08	90-durometer Nitrile
908	-8	0.64	0.09	90-durometer Nitrile
910	-10	0.76	0.1	90-durometer Nitrile
912	-12	0.92	0.12	90-durometer Nitrile
914	-14	1.05	0.12	90-durometer Nitrile
916	-16	1.17	0.12	90-durometer Nitrile
920	-20	1.48	0.12	90-durometer Nitrile
924	-24	1.72	0.12	90-durometer Nitrile
932	-32	2.34	0.12	90-durometer Nitrile

ORING (AS568) FLAT SEAL FITTINGS (KIT PART# 33-0123)

SAE SIZES & METRIC SIZES

STANDARD ORING PART #	HYDRAULIC SIZE	END SIZE SAE (IN)	END SIZE METRIC (MM)	ORING ID SAE (IN)	ORING ID METRIC (MM)	ORING WIDTH SAE (IN)	ORING WIDTH METRIC (MM)	ORING MATERIAL
011	-4	1/4	6	0.30	7.70	0.07	1.78	90-durometer Nitrile
012	-6	3/8	8, 10	0.36	9.30	0.07	1.78	90-durometer Nitrile
014	-8	1/2	12	0.49	12.40	0.07	1.78	90-durometer Nitrile
016	-10	5/8	14, 15, 16	0.61	15.60	0.07	1.78	90-durometer Nitrile
018	-12	3/4	18, 20	0.74	18.80	0.07	1.78	90-durometer Nitrile
020	-14	7/8	22	0.86	21.80	0.07	1.78	90-durometer Nitrile
021	-16	1	25	0.93	23.50	0.07	1.78	90-durometer Nitrile
025	-20	1 1/4	28, 30, 32	1.18	29.90	0.07	1.78	90-durometer Nitrile
029	-24	1 1/2	35, 38	1.49	37.80	0.07	1.78	90-durometer Nitrile
135	-32	2	50	1.93	490.00	0.10	2.54	90-durometer Nitrile

© Diamond Mowers®, LLC

APPENDIX

S.A.E. TORQUE SPECIFICATIONS

Nominal Dia. (in.)	threads per inch	Tensile Stress Area (sq. in.)	ASTM A307 Grade A				SAE J429 Grade 5				SAE J429 Grade 8				FNL Grade 9			
			Clamp Load (Lbs.)	Tightening Torque			Clamp Load (Lbs.)	Tightening Torque			Clamp Load (Lbs.)	Tightening Torque			Clamp Load (Lbs.)	Tightening Torque		
				K = 0.15	K = 0.17	K = 0.20		K = 0.15	K = 0.17	K = 0.20		K = 0.15	K = 0.17	K = 0.20		K = 0.15	K = 0.17	K = 0.20
Unified Coarse Thread Series																		
1/4	20	0.0318	859	32 in-lbs	37 in-lbs	43 in-lbs	2029	76 in-lbs	86 in-lbs	101 in-lbs	2864	107 in-lbs	122 in-lbs	143 in-lbs	3357	126 in-lbs	143 in-lbs	168 in-lbs
5/16	18	0.0524	1416	66	75	88	3342	157	178	209	4719	221	251	295	5531	259	294	346
3/8	16	0.0775	2092	10 ft-lbs	11 ft-lbs	13 ft-lbs	4940	23 ft-lbs	26 ft-lbs	31 ft-lbs	6974	33 ft-lbs	37 ft-lbs	44 ft-lbs	8174	38 ft-lbs	43 ft-lbs	51 ft-lbs
7/16	14	0.1063	2870	16	18	21	6777	37	42	49	9568	52	59	70	11214	61	70	82
1/2	13	0.1419	3831	24	27	32	9046	57	64	75	12771	80	90	106	14969	94	106	125
9/16	12	0.1819	4912	35	39	46	11599	82	92	109	16375	115	130	154	19193	135	153	180
5/8	11	0.2260	6102	48	54	64	14408	113	128	150	20340	159	180	212	23840	186	211	248
3/4	10	0.3345	9030	85	96	113	21322	200	227	267	30101	282	320	376	35281	331	375	441
7/8	9	0.4617	12467	136	155	182	29436	322	365	429	41556	455	515	606	48707	533	604	710
1	8	0.6057	16355	204	232	273	38616	483	547	644	54517	681	772	909	63899	799	905	1065
1 1/4	7	0.9691	26166	409	463	545	53786	840	952	1121	87220	1363	1545	1817	102229	1597	1810	2130
1 1/2	6	1.4053	37942	711	806	949	77991	1462	1657	1950	126473	2371	2688	3162	148237	2779	3150	3706
Fine Thread Series																		
1/4	28	0.0364	982	37 in-lbs	42 in-lbs	49 in-lbs	2319	87 in-lbs	99 in-lbs	116 in-lbs	3274	123 in-lbs	139 in-lbs	164 in-lbs	3837	144 in-lbs	163 in-lbs	192 in-lbs
5/16	24	0.0581	1568	73	83	98	3702	174	197	231	5226	245	278	327	6125	287	325	383
3/8	24	0.0878	2371	11 ft-lbs	13 ft-lbs	15 ft-lbs	5599	26 ft-lbs	30 ft-lbs	35 ft-lbs	7905	37 ft-lbs	42 ft-lbs	49 ft-lbs	9265	43 ft-lbs	49 ft-lbs	58 ft-lbs
7/16	20	0.1187	3205	18	20	23	7568	41	47	55	10684	58	66	78	12523	68	78	91
1/2	20	0.1600	4319	27	31	36	10197	64	72	85	14396	90	102	120	16873	105	120	141
9/16	18	0.2030	5480	39	44	51	12940	91	103	121	18268	128	146	171	21412	151	171	201
5/8	18	0.2560	6911	54	61	72	16317	127	144	170	23036	180	204	240	27000	211	239	281
3/4	16	0.3730	10070	94	107	126	23776	223	253	297	33566	315	357	420	39343	369	418	492
7/8	14	0.5095	13756	150	171	201	32479	355	403	474	45853	502	568	669	53743	588	666	784
1	14	0.6799	18357	229	260	306	43343	542	614	722	61190	765	867	1020	71720	896	1016	1195
1 1/4	12	1.0729	28970	453	513	604	59548	930	1055	1241	96565	1509	1710	2012	113182	1768	2004	2358
1 1/2	12	1.5810	42688	800	907	1067	87747	1645	1865	2194	142292	2668	3024	3557	166778	3127	3544	4169

The torque values can only be achieved if nut (or tapped hole) has a proof load greater than or equal to the bolt's minimum ultimate tensile strength.
Clamp load calculated as 75% of the proof load when specified by the standard. ASTM A307 utilized 75% of 36,000 PSI.
Torque values for 1/4 and 5/16-in series are in inch-pounds. All other torque values are in foot-pounds.
Torque values calculated from formula T=KDF, where

K = 0.15 for "lubricated" conditions
K = 0.17 for zinc plated and dry conditions; we have also found various forms of customer applied thread lockers to have a similar K value.
K = 0.20 for plain and dry conditions
D = Nominal Diameter
F = Clamp Load

Note: When using Zinc Plated (lubricated with wax) Top Lock Nuts, the K value can vary between 0.12-0.16

METRIC TORQUE SPECIFICATIONS

Nominal Dia. (mm)	Pitch	4.6 Class 4.6				8.8 Class 8.8				10.9 Class 10.9				12.9 Class 12.9			
		Clamp Load (lbs)	Tightening Torque			Clamp Load (lbs)	Tightening Torque			Clamp Load (lbs)	Tightening Torque			Clamp Load (lbs)	Tightening Torque		
			Lubricated (ft-lbs)	Zinc Plated (ft-lbs)	Plain&Dry (ft-lbs)		Lubricated (ft-lbs)	Zinc Plated (ft-lbs)	Plain&Dry (ft-lbs)		Lubricated (ft-lbs)	Zinc Plated (ft-lbs)	Plain&Dry (ft-lbs)		Lubricated (ft-lbs)	As-Received (ft-lbs)	Plain&Dry (ft-lbs)
4	0.7	333	0.7	0.7	0.9	858	1.7	1.9	2.3	1228	2.4	2.7	3.2	1436	2.8	3.2	3.8
5	0.8	538	1.3	1.5	1.8	1387	3.4	3.9	4.5	1985	4.9	5.5	6.5	2319	5.7	6.5	7.6
6	1	763	2.3	2.6	3.0	1968	5.8	6.6	7.7	2816	8.3	9.4	11.1	3291	9.7	11.0	13.0
7	1	1095	3.8	4.3	5.0	2822	9.7	11.0	13.0	4039	13.9	15.8	18.5	4720	16.3	18.4	21.7
8	1.25	1389	5.5	6.2	7.3	3580	14.1	16.0	18.8	5123	20.2	22.9	26.9	5987	23.6	26.7	31.4
10	1.5	2200	10.8	12.3	14.4	5671	27.9	31.6	37.2	8115	39.9	45.2	53.2	9484	46.7	52.9	62.2
12	1.75	3197	18.9	21.4	25.2	8240	48.7	55.1	64.9	11792	69.6	78.9	92.8	13781	81.4	92.2	108.5
14	2	4379	30.2	34.2	40.2	11289	77.8	88.1	103.7	16154	111.3	126.1	148.4	18879	130.0	147.4	173.4
16	2	5943	47	53	62	15320	121	137	161	21924	173	196	230	25622	202	229	269
18	2.5	7301	65	73	86	18822	167	189	222	26934	239	270	318	31477	279	316	372
20	2.5	9286	91	104	122	23938	236	267	314	34256	337	382	449	40034	394	446	525
22	2.5	11509	125	141	166	29669	321	364	428	42457	460	521	613	49619	537	609	716
24	3	13372	158	179	211	34471	407	461	543	49329	582	660	777	57649	681	771	908
27	3	17428	232	262	309	44924	597	676	796	64288	854	968	1139	75132	998	1131	1331
30	3.5	21266	314	356	419	54819	809	917	1079	78448	1158	1312	1544	91680	1353	1534	1804
33	3.5	26310	427	484	570	67821	1101	1248	1468	97055	1576	1786	2101	113425	1842	2087	2455
36	4	30982	549	622	732	79866	1415	1603	1886	114291	2024	2294	2699	133569	2366	2681	3154

The torque values can only be achieved if nut (or tapped hole) has a proof load greater than or equal to the bolt's minimum ultimate tensile strength.
Clamp loads estimated as 75% of proof load for specified bolts.
Torque values listed in foot-pounds .
Torque values calculated from formula T=KDF where; K=0.15 for "lubricated" condition, K=0.17 for zinc plated and dry condition (or as-received for the 12.9), K=0.20 for plain and dry condition

DEMAND
BRILLIANCE

DIAMONDMOWERS.COM

210901