PARTS BOOK

SKID-STEER FORESTRY DISC

60”(1524MM) FORESTRY DISC HEAD

SERIAL #28413+

WARRANTY + SERVICE 888.960.0364
PARTS 888.960.0361

Diamond MOWERS™

DIAMONDMOWERS.COM

TABLE OF CONTENTS

FORESTRY HEADS

DECK ASSEMBLY - GEAR MOTOR 4
DRIVE ASSEMBLY - 32-45GPM(122-170LPM), GEAR MOTOR 5
DECK ASSEMBLY - PISTON MOTOR 6
DRIVE ASSEMBLY - 32-45GPM(122-170LPM), PISTON MOTOR 7
CUTTING DISC - 60”(1524MM) 8
CHAIN GUARD ASSEMBLY - DECK 9
DECAL ASSEMBLY 10

DECK ASSEMBLIES

MOTOR ASSEMBLY - 30-0524 12
SPINDLE ASSEMBLY - 35-0107 13
SPINDLE ASSEMBLY - 35-0204 14

APPENDIX

S.A.E. TORQUE SPECIFICATIONS 16
METRIC TORQUE SPECIFICATIONS 17

FORESTRY HEADS

DECK ASSEMBLY - GEAR MOTOR

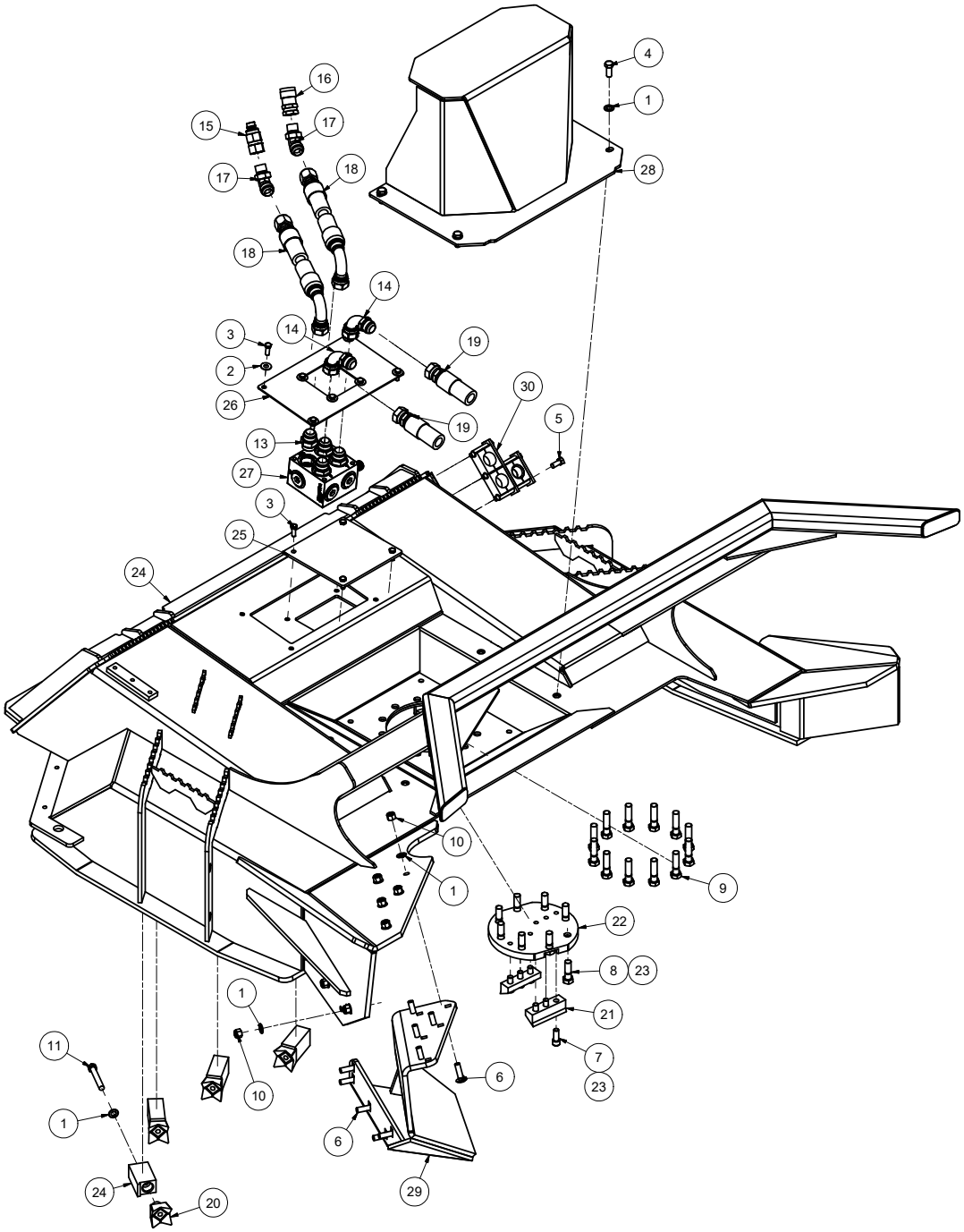

REF#	PARTS DESCRIPTION	REQ	PART#	TORQUE ft-lbs	TORQUE Nm
1	1/2 X 1.062 GR 8 SAE FLAT WASHER, YZ	18	11-0042		
2	3/8 THRU-HARDENED FLAT WASHER, YZ	8	11-0092		
3	3/8-16 X 1 GR 5 HEX CAP, ZINC	8	11-0532	31	42
4	1/2-13 X 1-1/4 GR 5 HEX CAP, ZINC	4	11-0570	75	102
5	7/16-14 X 1 GR 5, HEX CAP, ZINC	3	11-0584	49	66
6	1/2-13 X 1-3/4 GR 8 CARRIAGE BOLT, PLAIN	10	11-0961		
7	1/2-13 X 1-1/4 ASTM A574 SOCKET CAP, BO	6	11-0965	124	168
8	5/8-11 X 2 GR 8 HEX CAP, PLAIN	8	11-0970	212	287
9	5/8-11 X 2-1/2 GR 8 HEX CAP, YELLOW ZINC	12	11-0971	**212	**287
10	1/2-13 GR 8 NYLOCK NUT, ZINC	10	11-1072	**106	**144
11	1/2-20 X 3-1/2 GR 8 HEX CAP, YELLOW ZINC	4	11-1628	120	163
*12	DECAL KIT FBS060	1	15-5063		
13	1"MOR X 1"MJIC, ADAPTER	4	21-1005		
14	1MJIC X 1FJIC-90DEG, FITTING 3-3/4"	2	21-1258		
15	1/2" MALE QUICK COUPLER X 3/4" SAE, FF	1	21-1559		

REF#	PARTS DESCRIPTION	REQ	PART#	TORQUE ft-lbs	TORQUE Nm
16	1/2" FEMALE QUICK COUPLER X 3/4" SAE, FF	1	21-1560		
17	1MJIC-45DEG X 3/4M-OR, FITTING	2	21-1654		
18	HOSE 1 X 91 (1FJIC X 1FJIC-90DEG)	2	21-4645		
19	HOSE 1 X 29 (#20FLG-90 X 1FJIC)	2	21-4646		
20	TOOTH	4	22-0019		
21	FBC, CENTER PLANER	2	24-0192		
22	BOLT PROTECTOR, FBS, D3 SPINDLE	1	24-0224		
23	LOCTITE 262, .017 OZ (RED)	1	24-0382		
24	DECK (FBS 60 GEN 4)	1	25-0247		
25	60 SKID FBC ACCESS PORT COVER	1	31-0455		
26	MANIFOLD CUTOUT ACCESS PLATE	1	31-0740		
27	MANIFOLD, ANTI-CAVITATION, 3050 PSI RELIEF	1	39-0123		
28	MOTOR GUARD, D3 FBS	1	41-1461		
29	FBS 60 GEN 4 CHUTE	1	41-1888		
30	1" HOSE CLAMP KIT WITH TOP CLAMP, NO BASE	1	44-0351		

* NOT SHOWN

** CRITICAL TORQUE VALUES **MUST** BE FOLLOWED.

25-1854-1	Rev A

© Diamond Mowers®, LLC

FORESTRY DISC HEAD

DRIVE ASSEMBLY - 32-45GPM(122-170LPM), GEAR MOTOR

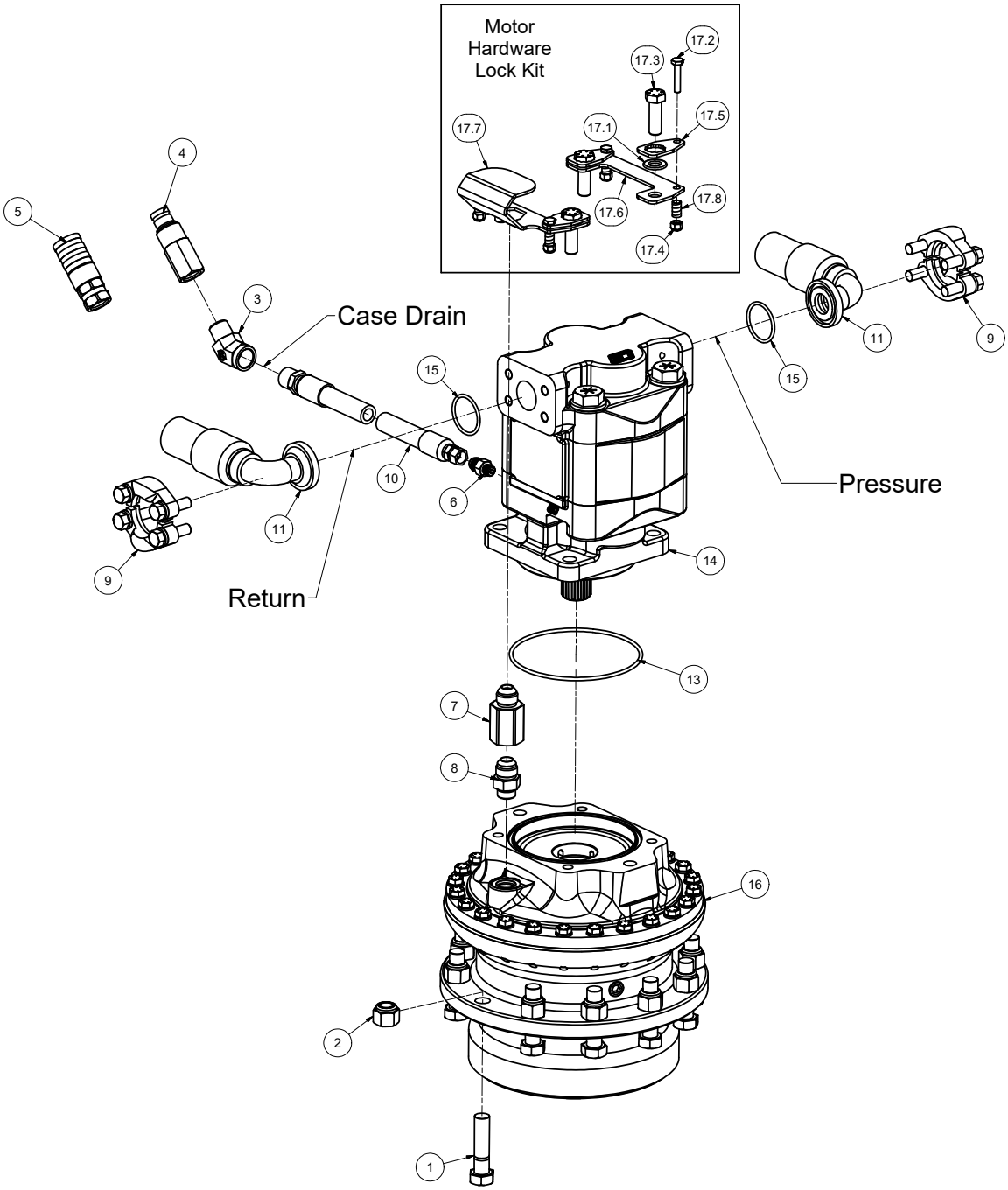

REF#	PARTS DESCRIPTION	REQ	PART#	TORQUE ft-lbs	TORQUE Nm
1	5/8-11 X 2-1/2 GR 8 HEX CAP, YELLOW ZINC	12	11-0971		
2	5/8-11 GR 8 NYLOCK NUT, YELLOW ZINC	12	11-1073		
3	1/2MP X 1/2FP ADAPTER 45 DEG	1	21-1290		
4	3/8" MALE QUICK COUPLER, FLAT FACE,	1	21-1561		
5	3/8" FEMALE QUICK COUPLER, FLAT FACE	1	21-1562		
6	ADAPTER, 1/4MOR X 3/8MJIC	1	21-1597		
7	JEMTEC D3 SPINDLE RELIEF VALVE	1	21-1653		
8	5/8MJIC X 1/2MORB	1	21-1706		
9	#20 FLANGE KIT	2	21-2105	49	66
10	HOSE 3/8 X 106 (3/8FJIC X 1/2MP) KEVLAR	1	21-4613		
11	HOSE 1 X 29 (#20FLG-90 X 1FJIC)	2	21-4646		
12	LOCTITE 262, .017 OZ (RED)	1	24-0382		
13	O-RING, D3 SPINDLE	1	24-0305		
14	MOTOR 365 2-1/4" GEAR, 1-1/4 14 SPLINE SHAFT	1	30-0524		
15	#20 O-RING	2	33-0013		
16	SPINDLE-D3 DIRECT DRIVE SAE C	1	35-0204		

REF#	PARTS DESCRIPTION	REQ	PART#	TORQUE ft-lbs	TORQUE Nm
17	MOTOR HARDWARE LOCK KIT	1	44-0803		
17.1	1/2 SAE FLAT WASHER GR 8, YELLOW ZINC	4	11-0042		
17.2	1/4 X 1-1/4 NC HEX CAP	4	11-0702	8.5	11.5
17.3	1/2-13 X 1-1/2 GR 8 HEX CAP SCREW, YZ	4	11-0972	**106	**144
17.4	1/4-20 GR 5 NYLOCK NUT, ZINC	4	11-1022		
17.5	MOTOR BOLT LOCK TAB	4	31-0503		
17.6	V3LOCK BOTTOM	1	31-0504		
17.7	MOTOR LOCKING BASE WITH PRV PROTECTION	1	31-0824		
17.8	BOLT LOCKING TAB SPRING	4	36-0013		
	OPTIONAL QUICK COUPLERS				
	5/8 MALE QUICK COUPLER, FLAT FACE		21-1574		
	5/8 FEMALE QUICK COUPLER, FLAT FACE		21-1575		
	3/4 MALE QUICK COUPLER, FLAT FACE		21-1576		
	3/4 FEMALE QUICK COUPLER, FLAT FACE		21-1577		

25-1854-2	Rev A

** CRITICAL TORQUE VALUES **MUST** BE FOLLOWED.

© Diamond Mowers®, LLC

DECK ASSEMBLY - PISTON MOTOR

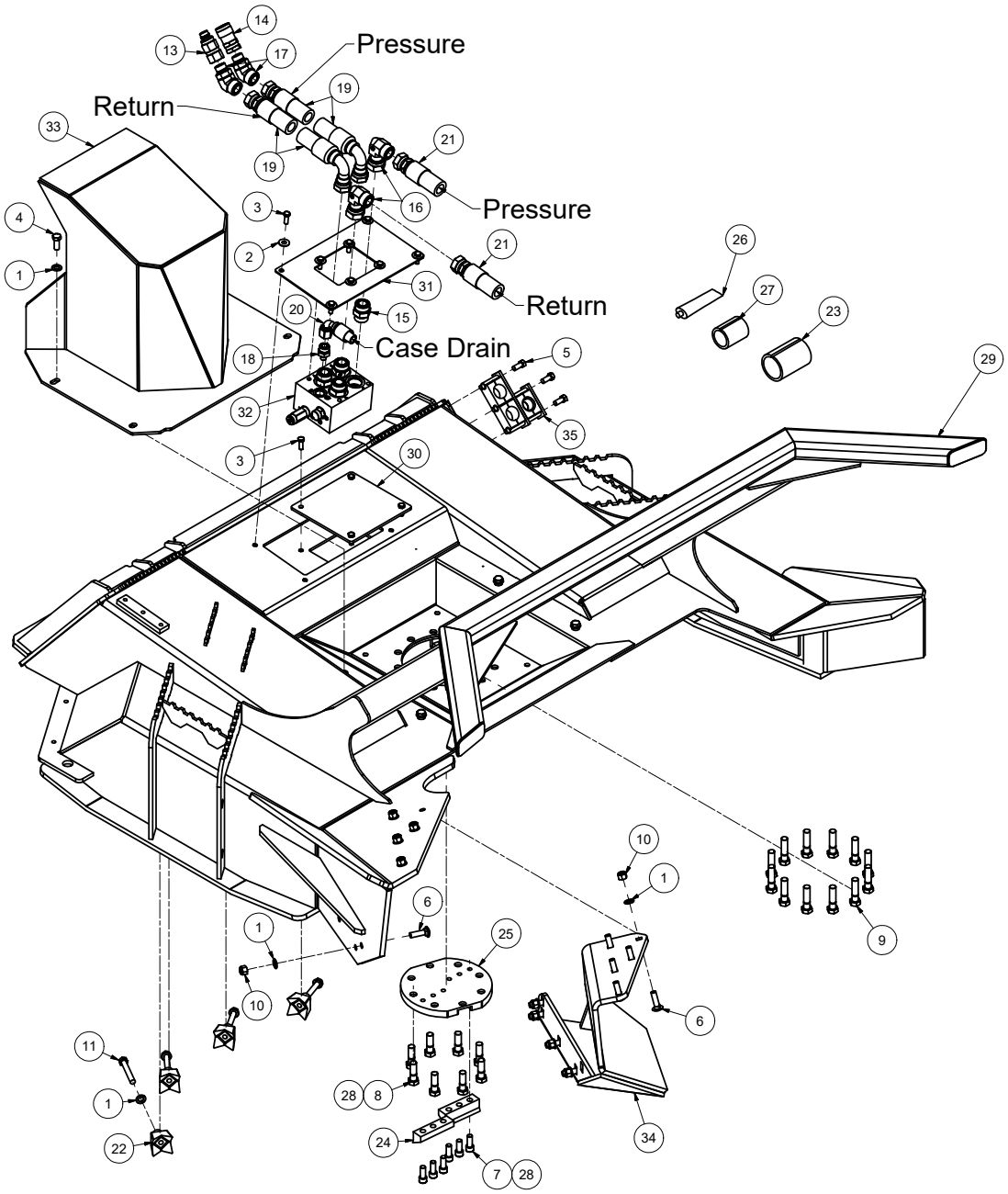

REF#	PARTS DESCRIPTION	REQ	PART#	TORQUE ft-lbs	TORQUE Nm
1	1/2 X 1.062 GR 8 SAE FLAT WASHER, YELLOW ZINC	18	11-0042		
2	3/8 THRU-HARDENED FLAT WASHER, YELLOW ZINC	8	11-0092		
3	3/8-16 X 1 GR 5 HEX CAP, ZINC	12	11-0532	31	42
4	1/2-13 X 1-1/4 GR 5 HEX CAP, ZINC	4	11-0570	75	102
5	7/16-14 X 1 GR 5, HEX CAP, ZINC	3	11-0584	49	66
6	1/2-13 X 1-3/4 GR 8 CARRIAGE BOLT, PLAIN	10	11-0961		
7	1/2-13 X 1-1/4 ASTM A574 SOCKET CAP, BLACK OXIDE	6	11-0965	124	168
8	5/8-11 X 2 GR 8 HEX CAP, PLAIN	8	11-0970	212	287
9	5/8-11 X 2-1/2 GR 8 HEX CAP, YELLOW ZINC	12	11-0971	**212	**287
10	1/2-13 GR 8 NYLOCK NUT, ZINC	10	11-1072	**106	**144
11	1/2-20 X 3-1/2 GR 8 HEX CAP, YELLOW ZINC	4	11-1628	120	163
12	DECAL KIT FBS060	1	15-5063		
13	1/2" MALE QUICK COUPLER X 3/4" SAE, FLAT FACE, NO SPILL	1	21-1559		
14	1/2" FEMALE QUICK COUPLER X 3/4" SAE, FLAT FACE, NO SPILL	1	21-1560		
15	-16 MOR X -16 MOFS	4	21-1675		
16	ELBOW, -16MFS X -16FFS, 90DEG	2	21-1679		
17	ELBOW, -12 ADJ MOR X -16 MFS, 45 DEG	2	21-1689		
18	-10 MOFS X -10 MORB	1	21-1705		

REF#	PARTS DESCRIPTION	REQ	PART#
19	HOSE, 1 X 88, 4000 PSI (-16 FFS X -16 FFS 90 DEG) KEVLAR	2	21-4616
20	HOSE, 5-8 X 25 (-10 FFS 90 DEG X -10 FFS)	1	21-4636
21	HOSE 1 X 31, 4000 PSI (-20 CD 62 FLG 90 DEG X -16 FFS) KEVLAR	2	21-4637
22	TOOTH	4	22-0019
23	KEVLAR SLEEVING 2 3/8 ID X 4.00 FLAT (SOLD/FT)	1	24-0141
24	FBC, CENTER PLANER	2	24-0192
25	BOLT PROTECTOR, FBS, D3 SPINDLE	1	24-0224
26	LIQUID METAL FILLER, 3.5 OZ/PK	1	24-0307
27	KEVLAR SLEEVING - 1-3/4 ID X 2.80 FLAT (SOLD/FT)	1	24-0359
28	LOCTITE 262, .017 OZ (RED)	1	24-0382
29	FBS 60 GEN 4	1	25-0247
30	60 SKID FBC ACCESS PORT COVER	1	31-0455
31	MANIFOLD CUTOUT ACCESS PLATE	1	31-0748
32	ANTI CAVITATION-FLUSHING MANIFOLD, ATTACHMENT	1	39-0126
33	MOTOR GUARD, D3 FBS, PISTON	1	41-1729
34	FBS 60 GEN 4 CHUTE	1	41-1888
35	1" HOSE CLAMP KIT WITH TOP CLAMP, NO BASE	1	44-0351

* NOT SHOWN

** CRITICAL TORQUE VALUES **MUST** BE FOLLOWED.

25-1855-1	Rev 000

© Diamond Mowers®, LLC

DRIVE ASSEMBLY - 32-45GPM(122-170LPM), PISTON MOTOR

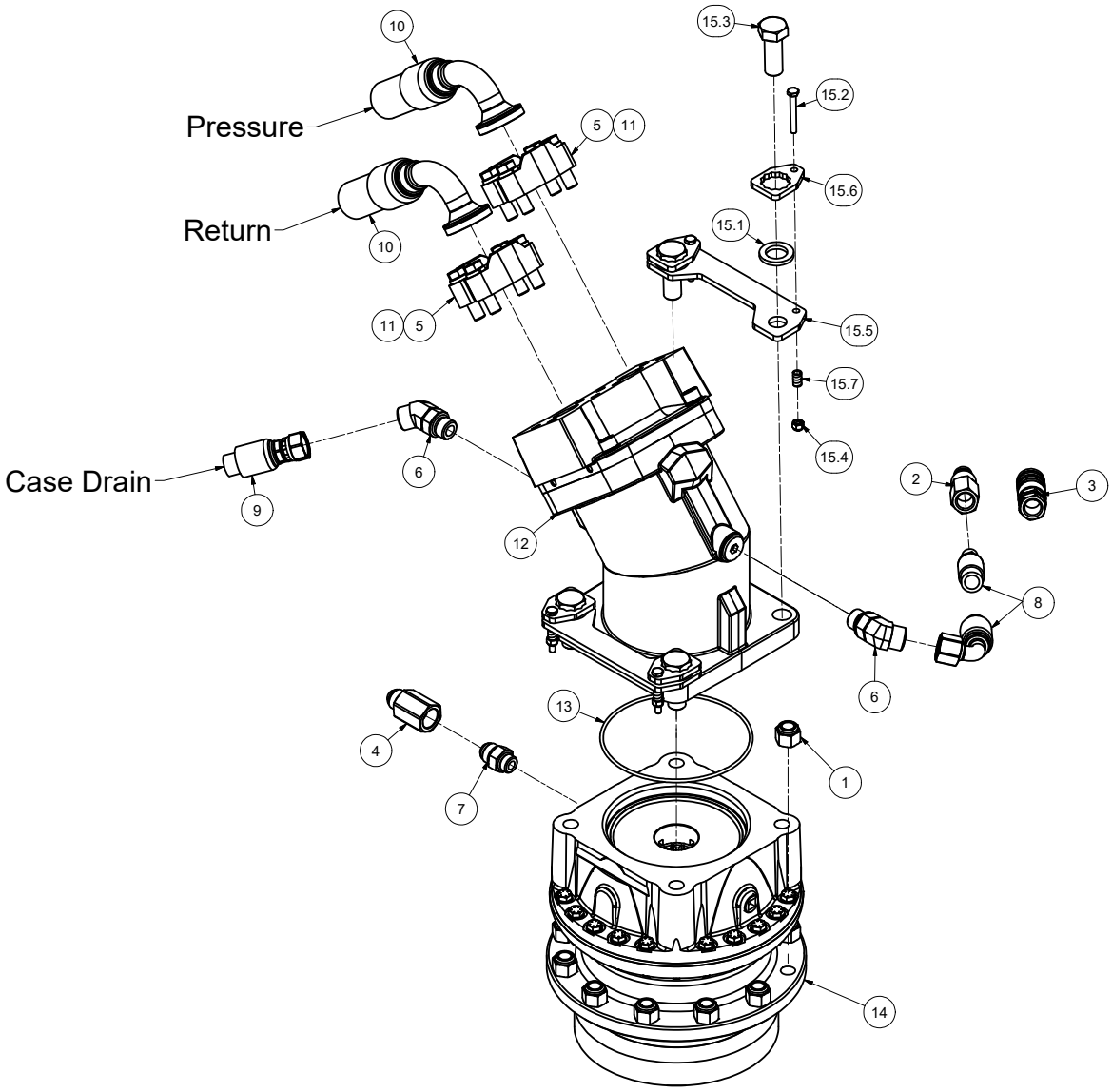

REF#	PARTS DESCRIPTION	REQ	PART#	TORQUE ft-lbs	TORQUE Nm
1	5/8-11 GR 8 NYLOCK NUT, YELLOW ZINC	12	11-1073		
2	3/8" MALE QUICK COUPLER, FLAT FACE, NO SPILL	1	21-1561		
3	3/8" FEMALE QUICK COUPLER, FLAT FACE, NO SPILL	1	21-1562		
4	JEMTEC D3 SPINDLE RELIEF VALVE	1	21-1653		
5	-20 FLANGE KIT, CODE 62	2	21-1678		
6	ELBOW, -10 ADJ MOR X -10MFS, 45 DEG	2	21-1688		
7	5/8MJIC X 1/2MORB	1	21-1706		
8	HOSE, 5/8 X 118 (-10 FFS 90 DEG X -8 MP)	1	21-4618		
9	HOSE, 5-8 X 25 (-10 FFS 90 DEG X -10 FFS)	1	21-4636		
10	HOSE 1 X 31, 4000 PSI (-20 CD 62 FLG 90 DEG X -16 FFS) KEVLAR	2	21-4637		
11	LOCTITE 262, .017 OZ (RED)	1	24-0382		
12	MA125 FIXED DISPL. BENT AXIS PISTON MOTOR	1	30-0553		
13	O-RING SAE D	1	33-0098		
14	D3 SPINDLE, DIRECT DRIVE, SAE D 4 BOLT BASE, SAE D REMOVEABLE SPLINED INSERT	1	35-0107		
15	MOTOR LOCKING HARDWARE KIT	1	44-0865		
15.1	3/4 SAE GR 8 FLAT WASHER, YELLOW	4	11-0039		
15.2	1/4-20 X 2 GR 5 HEX CAP, ZINC	4	11-0590	8.5	11.5
15.3	3/4-10 X 2 GR 8 HEX CAP, YELLOW ZINC	4	11-0751	**376	**510
15.4	1/4-20 GR 5 NYLOCK NUT, ZINC	4	11-1022		
15.5	MOTOR BOLT LOCK BASE, SAE D	2	31-0759		
15.6	MOTOR BOLT LOCK TAB, SAE D	4	31-0760		
15.7	BOLT LOCKING TAB SPRING	4	36-0013		
	OPTIONAL QUICK COUPLERS				
	5/8 MALE QUICK COUPLER, FLAT FACE	1	21-1574		
	5/8 FEMALE QUICK COUPLER, FLAT FACE	1	21-1575		
	3/4 MALE QUICK COUPLER, FLAT FACE	1	21-1576		
	3/4 FEMALE QUICK COUPLER, FLAT FACE	1	21-1577		

** CRITICAL TORQUE VALUES **MUST** BE FOLLOWED.

25-1855-2 | Rev 000

© Diamond Mowers®, LLC

FORESTRY DISC HEAD

CUTTING DISC - 60"(1524MM)

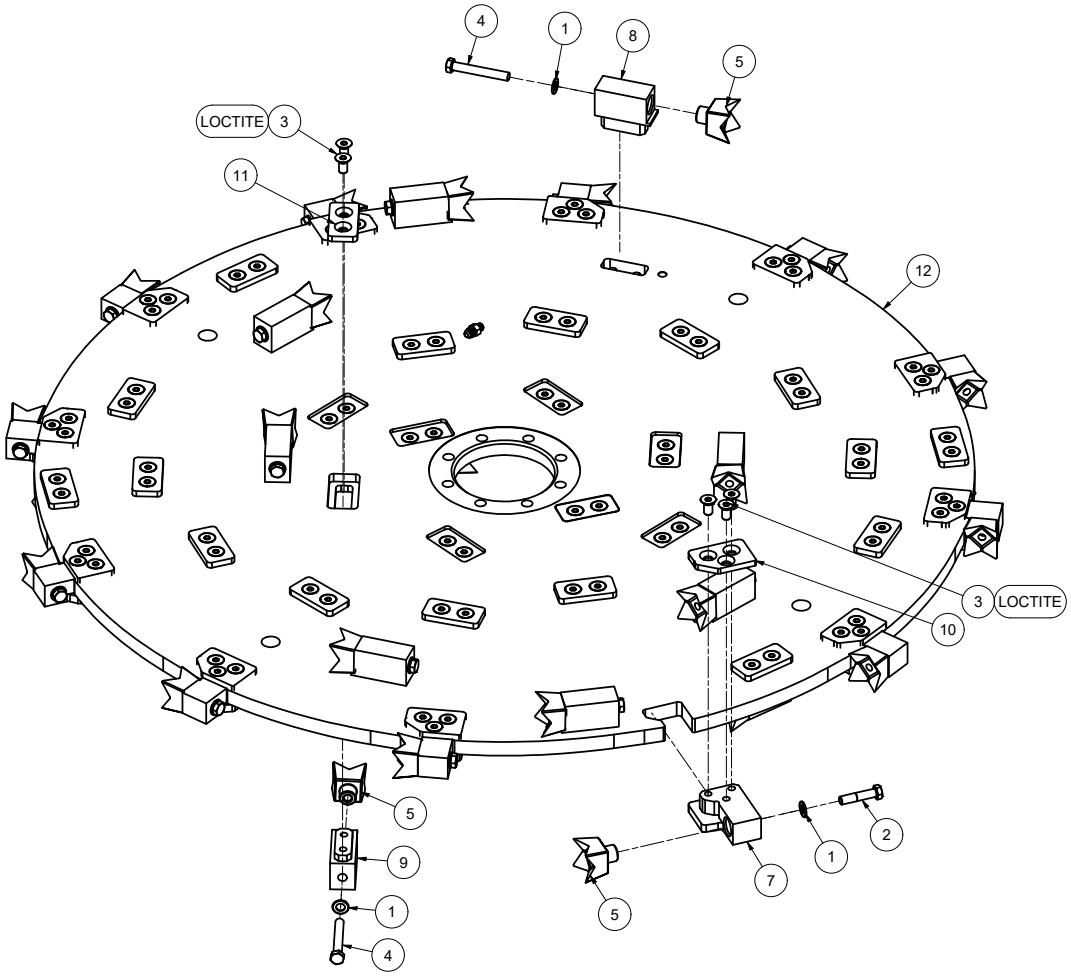

REF#	PARTS DESCRIPTION	REQ	PART#	TORQUE (ft-lbs)	TORQUE (Nm)
1	1/2 X 1.062 GR 8 SAE FLAT WASHER, YELLOW ZINC	44	11-0042		
2	1/2 X 2-1/4 H.S. NF HEX CAP	12	11-0660	120.0	162.7
3	1/2 X 1 FLAT SHCS UNC	100	11-1158	110.0	149.1
4	1/2 X 3-1/2 NF HEX CAP, GR 8	32	11-1628	120.0	162.7
5	TOOTH	44	22-0019		
6	LOCTITE 277,10ML	1	24-0309		
7	OUTER TOOTH HOLDER	12	90-7054		
8	MIDDLE TOOTH HOLDER W-O COUNTERSINK	24	90-7073		
9	INNER TOOTH HOLDER W-O COUNTERSINK	8	90-7074		
10	OUTER TOOTH HOLDER COVER	12	P24-0270-12		
11	COVER	32	P24-0270-13		
12	D3 DISH BLANK W-EXISTING PATTERN	1	P24-0283-11		
	TOOTH KIT	1	44-0830		
	FORESTRY TOOTH, STEEL	20	22-0019		
	TOOTH KIT	1	44-0831		
	TOOTH KIT - 50 TEETH, NO HARDWARE	50	22-0019		
	PLANER KIT	1			
	FBC, CENTER PLANER	2	24-0192		
	1/2 X 1-1/4 NC SHCS	6	11-0965		

REF#	PARTS DESCRIPTION	REQ	PART#	TORQUE (ft-lbs)	TORQUE (Nm)
	OUTER TOOTH HOLDER KIT	1	44-0835		
	1/2 X 1 FSHCS NC	3	11-1158		
	OUTER TOOTH HOLDER - BOLT ON	1	90-7054		
	OUTER TOOTH HOLDER COVER	1	P24-0270-12		
	LOCTITE 277, 10ML	1	24-0309		
	MIDDLE TOOTH HOLDER KIT	1	44-0862		
	1/2 X 1 FSHCS NC	2	11-1158		
	MIDDLE TOOTH HOLDER W-O COUNTERSINK	1	90-7073		
	COVER	1	P24-0270-13		
	LOCTITE 277, 10ML	1	24-0309		
	INNER TOOTH HOLDER KIT	1	44-0863		
	1/2 X 1 FSHCS NC	2	11-1158		
	INNER TOOTH HOLDER W-O COUNTERSINK	1	90-7074		
	COVER	1	P24-0270-13		
	LOCTITE 277, 10ML	1	24-0309		
	COMPLETE TOOTH KIT	1	44-0861		
	1/2 X 2-1/4 H.S. NF HEX CAP	12	11-0660		
	1/2 X 3-1/2 NF HEX CAP, GR 8	36	11-1628		
	1/2 SAE FLAT WASHER GR 8,	48	11-0042		
	FORESTRY TOOTH, STEEL	48	22-0019		

24-0283	Rev 000

© Diamond Mowers®, LLC

CHAIN GUARD ASSEMBLY - DECK

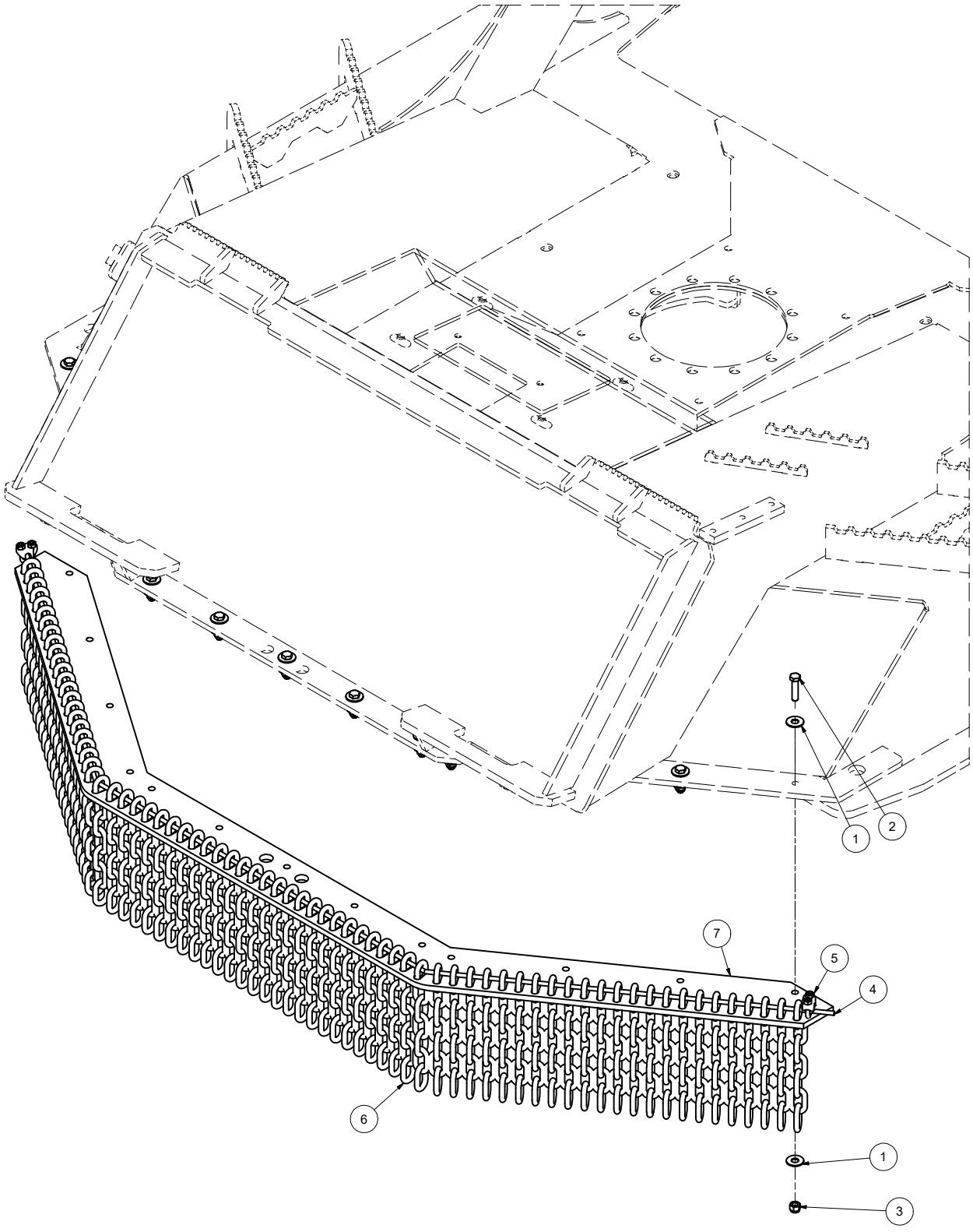

REF#	PARTS DESCRIPTION	REQ	PART#	TORQUE ft-lbs	TORQUE Nm
1	3/8 THRU-HARDENED FLAT WASHER, YELLOW ZINC	26	11-0092		
2	3/8-16 X 1-1/2 GR 5 HEX CAP, ZINC	13	11-0529	31	42
3	3/8-16 GR 2 NYLOCK NUT, ZINC	13	11-1024		
4	1/4" GALVANIZED CABLE 7,000 LBS TENSILE STRENGTH (SOLD PER FOOT)	6.5	12-0032		
5	1/4" WIRE ROPE CLAMP	2	12-0033		
6	5/16 ZINC CHAIN - 7 LINKS GRADE 30	74	12-0036		
7	FBS CHAIN GUARD	1	31-0753		

44-0898-1 | Rev A

NOTE: THE ABOVE SPECIFIED TORQUE VALUES **MUST** BE FOLLOWED.

© Diamond Mowers®, LLC

FORESTRY DISC HEAD

DECAL ASSEMBLY

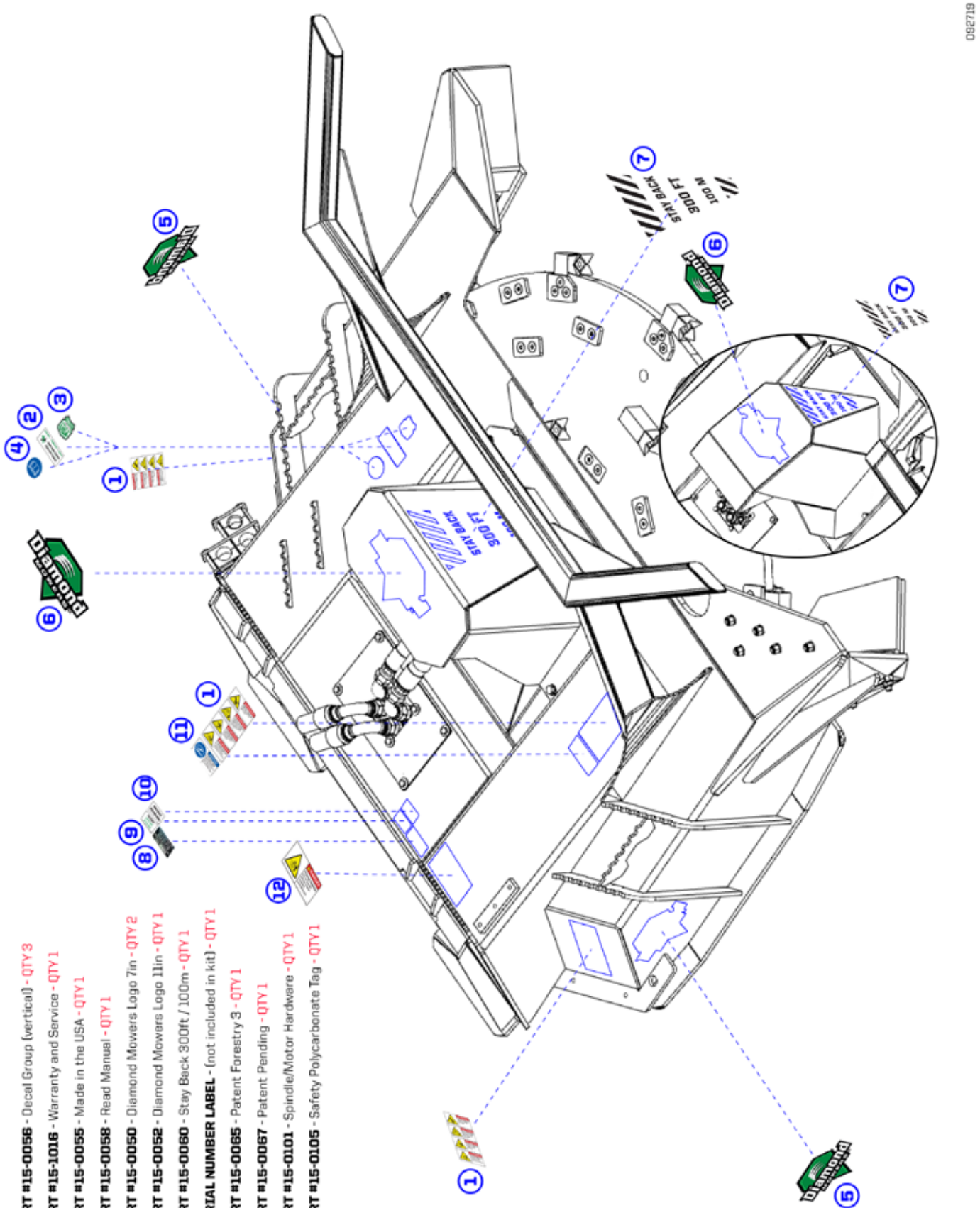

(1) **PART #15-0056** - Decal Group (vertical) - QTY 3
(2) **PART #15-1016** - Warranty and Service - QTY 1
(3) **PART #15-0055** - Made in the USA - QTY 1
(4) **PART #15-0058** - Read Manual - QTY 1
(5) **PART #15-0050** - Diamond Mowers Logo 7in - QTY 2
(6) **PART #15-0052** - Diamond Mowers Logo 11in - QTY 1
(7) **PART #15-0060** - Stay Back 300ft / 100m - QTY 1
(8) **SERIAL NUMBER LABEL** - (not included in kit) - QTY 1
(9) **PART #15-0065** - Patent Forestry 3 - QTY 1
(10) **PART #15-0067** - Patent Pending - QTY 1
(11) **PART #15-0101** - Spindle/Motor Hardware - QTY 1
(12) **PART #15-0105** - Safety Polycarbonate Tag - QTY 1

© Diamond Mowers®, LLC

DECK ASSEMBLIES

DECK ASSEMBLIES

MOTOR ASSEMBLY - 30-0524

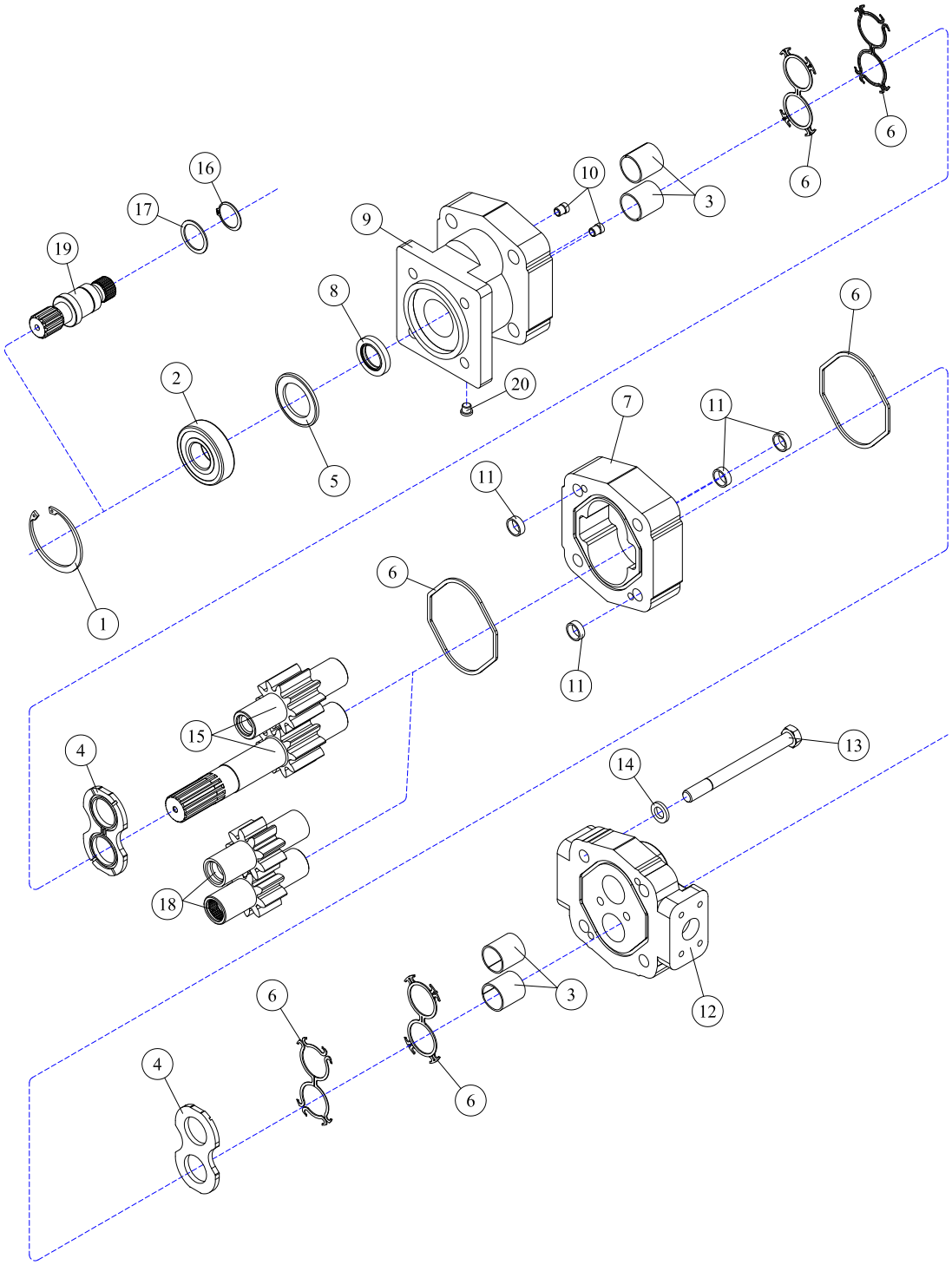

REF#	PARTS DESCRIPTION	REQ	PART #
1	SNAP RING	1	30-1009
2	OUTBOARD BEARING	1	30-1010
3	BUSHING	4	30-1011
4	THRUST PLATE	2	30-1012
5	SEAL RETAINER	1	30-1017
6	M365 SEAL KIT	Avail	30-1021
7	2-1/4" M365 GEAR HOUSING	1	30-1026
8	**SHAFT SEAL**		
	150 PSI (included in M365 seal kit)	1	30-1210
	500 PSI	1	30-1156
9	SHAFT END COVER	1	30-1086
10	CHECK ASSEMBLY	2	30-1087
11	ALIGNMENT BUSHING	4	30-1090

REF#	PARTS DESCRIPTION	REQ	PART #
12	PORT END COVER	1	30-1091
13	STUD	4	Call
14	WASHER	4	30-1093
	GEAR SET OPTION A:		
15	2-1/4" GEAR SET	1	30-1165
	GEAR SET OPTION B:		
16	RETAINING RING	1	30-1019
17	WASHER	1	30-1020
18	2-1/4" GEAR SET	1	30-1025
19	CONTINENTAL SHAFT, SPLINED	1	30-1144
20	PLUG	1	30-1096
*	SEAL APPLICATOR TOOL (not shown)	Avail	30-1048

© Diamond Mowers®, LLC

SPINDLE ASSEMBLY - 35-0107

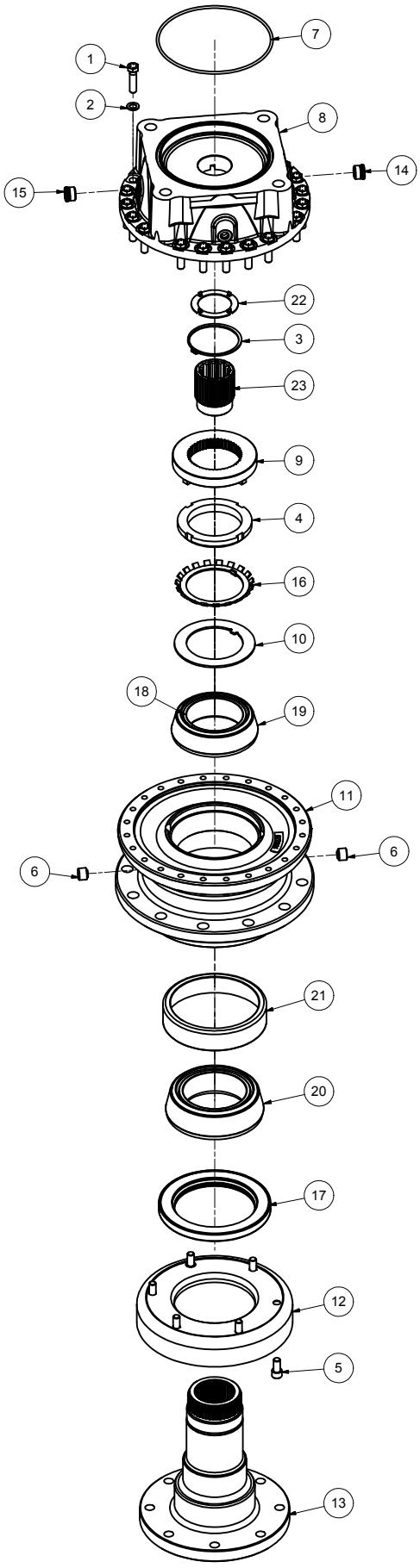

REF#	PARTS DESCRIPTION	REQ	PART#	TORQUE (ft-lbs)	TORQUE (Nm)
1	BOLT-HEX HEAD, FOR D3 SPINDLE	20	11-1611	45	60
2	FLAT WASHER, FOR D3 SPINDLE	20	11-1612		
3	RETAINING RING, FOR D3 SPINDLE	1	11-1613		
4	LOCKNUT, FOR D3 SPINDLE	1	11-1614		
5	SOCKET HEAD CAPSCREW, FOR D3 SPINDLE	6	11-1616		
6	PIPE PLUG TO HUB MAGNETIC	2	21-1611		
7	O-RING SAE D	1	33-0098		
8	D3 SPINDLE CAP,D BASE	1	35-0095		
9	KEEPER PLATE, D3 SPINDLE	1	35-0098		
10	BOTTOM THRUST WASHER, D3 SPINDLE	1	35-0099		
11	HUB	1	35-0100		
12	GUARD	1	35-0102		
13	OUTPUT SHAFT, D3 SPINDLE	1	35-0103		
14	D3 SPINDLE SAE C TOP PORT PLUGS	1	35-0200		
15	PORT PLUG-.75 -16 UNF-2A	1	35-0202		
	SEAL KIT		33-0078		
16	LOCK-WASHER, FOR D3 SPINDLE	1			
17	OIL-SEAL, D3 SPINDLE	1			
*	SEALANT	1			
	BEARING AND SEAL KIT		33-0079		
16	LOCK-WASHER, FOR D3 SPINDLE	1			
17	OIL-SEAL, D3 SPINDLE	1			
18	TOP BEARING-CONE, FOR D3 SPINDLE	1			
19	TOP BEARING-CUP, FOR D3 SPINDLE	1			
20	BOTTOM BEARING-CONE, FOR D3 SPINDLE	1			
21	BOTTOM BEARING-CUP, FOR D3 SPINDLE	1			
*	SEALANT	1			
	D3 SPINDLE REPLACEMENT INSERT KIT		33-0080		
22	TOP THRUST WASHER, D3 SPINDLE	1			
23	COUPLING, D3 SPINDLE, SAE D SPLINE	1			

* NOT SHOWN

35-0107	Rev 000

© Diamond Mowers®, LLC

SPINDLE ASSEMBLY - 35-0204

REF#	PARTS DESCRIPTION	REQ	PART #
1	BOLT-HEX HEAD	24	11-1611
2	WASHER-FLAT	24	11-1612
3	RING-RETAINING	1	11-1613
4	NUT-LOCK	1	11-1614
5	SCREW-SKT HD CAP	6	11-1616
6	PIPE PLUG (TO COVER) (MAGNETIC)	1	21-1609
7	PIPE PLUG (TO COVER) (NON-MAGNETIC)	1	21-1610
8	PIPE PLUG (TO HUB) (MAGNETIC)	2	21-1611
9	PLATE-KEEPER	1	35-0098
10	WASHER-THRUST (BOTTOM)	1	35-0099
11	HUB	1	35-0100
12	GUARD	1	35-0102
13	SHAFT-OUTPUT	1	35-0103
14	**COVER**		
	C BASE (STANDARD)	1	35-0199
	SEAL KIT		**33-0078**
15	WASHER-LOCK	1	
16	SEAL-OIL	1	
	SEALANT		
	BEARING AND SEAL KIT		**33-0079**
17	BEARING-CONE (TOP)	1	
18	BEARING-CUP (TOP)	1	
19	BEARING-CONE (BOTTOM)	1	
20	BEARING-CUP (BOTTOM)	1	
15	WASHER-LOCK	1	
16	OIL SEAL	1	
	SEALANT	1	
	D3 SPINDLE REPLACEMENT INSERT KIT		**33-0080**
21	WASHER-THRUST (TOP)	1	
22	COUPLING	1	
	SEALANT		

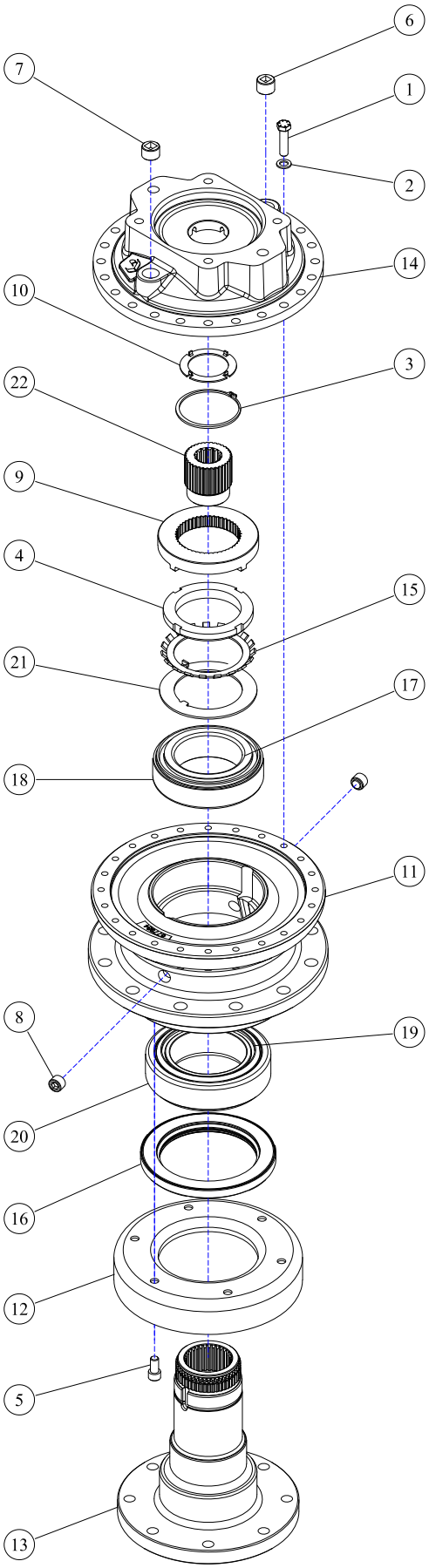

Assy: 35-0204 Date: 09/10/19

© Diamond Mowers®, LLC

APPENDIX

S.A.E. TORQUE SPECIFICATIONS

Torque-Tension Relationship for A307A, Grade 5, 8 & 9 Bolts

Nominal Dia. (in.)	threads per inch	Tensile Stress Area (sq. in.)	ASTM A307 Grade A				SAE J429 Grade 5				SAE J429 Grade 8				FNL Grade 9			
			Clamp Load (Lbs.)	Tightening Torque			Clamp Load (Lbs.)	Tightening Torque			Clamp Load (Lbs.)	Tightening Torque			Clamp Load (Lbs.)	Tightening Torque		
				K = 0.15	K = 0.17	K = 0.20		K = 0.15	K = 0.17	K = 0.20		K = 0.15	K = 0.17	K = 0.20		K = 0.15	K = 0.17	K = 0.20
Unified Coarse Thread Series																		
1/4	20	0.0318	859	32 in-lbs	37 in-lbs	43 in-lbs	2029	76 in-lbs	86 in-lbs	101 in-lbs	2864	107 in-lbs	122 in-lbs	143 in-lbs	3357	126 in-lbs	143 in-lbs	168 in-lbs
5/16	18	0.0524	1416	66	75	88	3342	157	178	209	4719	221	251	295	5531	259	294	346
3/8	16	0.0775	2092	10 ft-lbs	11 ft-lbs	13 ft-lbs	4940	23 ft-lbs	26 ft-lbs	31 ft-lbs	6974	33 ft-lbs	37 ft-lbs	44 ft-lbs	8174	38 ft-lbs	43 ft-lbs	51 ft-lbs
7/16	14	0.1063	2870	16	18	21	6777	37	42	49	9568	52	59	70	11214	61	70	82
1/2	13	0.1419	3831	24	27	32	9046	57	64	75	12771	80	90	106	14969	94	106	125
9/16	12	0.1819	4912	35	39	46	11599	82	92	109	16375	115	130	154	19193	135	153	180
5/8	11	0.2260	6102	48	54	64	14408	113	128	150	20340	159	180	212	23840	186	211	248
3/4	10	0.3345	9030	85	96	113	21322	200	227	267	30101	282	320	376	35281	331	375	441
7/8	9	0.4617	12467	136	155	182	29436	322	365	429	41556	455	515	606	48707	533	604	710
1	8	0.6057	16355	204	232	273	38616	483	547	644	54517	681	772	909	63899	799	905	1065
1 1/4	7	0.9691	26166	409	463	545	53786	840	952	1121	87220	1363	1545	1817	102229	1597	1810	2130
1 1/2	6	1.4053	37942	711	806	949	77991	1462	1657	1950	126473	2371	2688	3162	148237	2779	3150	3706
Fine Thread Series																		
1/4	28	0.0364	982	37 in-lbs	42 in-lbs	49 in-lbs	2319	87 in-lbs	99 in-lbs	116 in-lbs	3274	123 in-lbs	139 in-lbs	164 in-lbs	3837	144 in-lbs	163 in-lbs	192 in-lbs
5/16	24	0.0581	1568	73	83	98	3702	174	197	231	5226	245	278	327	6125	287	325	383
3/8	24	0.0878	2371	11 ft-lbs	13 ft-lbs	15 ft-lbs	5599	26 ft-lbs	30 ft-lbs	35 ft-lbs	7905	37 ft-lbs	42 ft-lbs	49 ft-lbs	9265	43 ft-lbs	49 ft-lbs	58 ft-lbs
7/16	20	0.1187	3205	18	20	23	7568	41	47	55	10684	58	66	78	12523	68	78	91
1/2	20	0.1600	4319	27	31	36	10197	64	72	85	14396	90	102	120	16873	105	120	141
9/16	18	0.2030	5480	39	44	51	12940	91	103	121	18268	128	146	171	21412	151	171	201
5/8	18	0.2560	6911	54	61	72	16317	127	144	170	23036	180	204	240	27000	211	239	281
3/4	16	0.3730	10070	94	107	126	23776	223	253	297	33566	315	357	420	39343	369	418	492
7/8	14	0.5095	13756	150	171	201	32479	355	403	474	45853	502	568	669	53743	588	666	784
1	14	0.6799	18357	229	260	306	43343	542	614	722	61190	765	867	1020	71720	896	1016	1195
1 1/4	12	1.0729	28970	453	513	604	59548	930	1055	1241	96565	1509	1710	2012	113182	1768	2004	2358
1 1/2	12	1.5810	42688	800	907	1067	87747	1645	1865	2194	142292	2668	3024	3557	166778	3127	3544	4169

The torque values can only be achieved if nut (or tapped hole) has a proof load greater than or equal to the bolt's minimum ultimate tensile strength.
Clamp load calculated as 75% of the proof load when specified by the standard. ASTM A307 utilized 75% of 36,000 PSI.
Torque values for 1/4 and 5/16-in series are in inch-pounds. All other torque values are in foot-pounds.
Torque values calculated from formula T=KDF, where

K = 0.15 for "lubricated" conditions
K = 0.17 for zinc plated and dry conditions; we have also found various forms of customer applied thread lockers to have a similar K value.
K = 0.20 for plain and dry conditions
D = Nominal Diameter
F = Clamp Load

Note: When using Zinc Plated (lubricated with wax) Top Lock Nuts, the K value can vary between 0.12-0.16

Caution: All material included in this chart is advisory only, and its use by anyone is voluntary. In developing this information, Fastenal has made a determined effort to present its contents accurately. Extreme caution should be used when using a formula for torque/tension relationships. Torque is only an indirect indication of tension. Under/over tightening of fasteners can result in costly equipment failure or personal injury.

Rev 3-6-09

© Diamond Mowers®, LLC

METRIC TORQUE SPECIFICATIONS

Torque-Tension Relationship for Metric Fasteners

Nominal Dia. (mm)	Pitch	4.6 Class 4.6				8.8 Class 8.8				10.9 Class 10.9				12.9 Class 12.9			
		Clamp Load (lbs)	Tightening Torque Lubricated (ft-lbs)	Zinc Plated (ft-lbs)	Plain&Dry (ft-lbs)	Clamp Load (lbs)	Tightening Torque Lubricated (ft-lbs)	Zinc Plated (ft-lbs)	Plain&Dry (ft-lbs)	Clamp Load (lbs)	Tightening Torque Lubricated (ft-lbs)	Zinc Plated (ft-lbs)	Plain&Dry (ft-lbs)	Clamp Load (lbs)	Tightening Torque Lubricated (ft-lbs)	As-Received (ft-lbs)	Plain&Dry (ft-lbs)
4	0.7	333	0.7	0.7	0.9	858	1.7	1.9	2.3	1228	2.4	2.7	3.2	1436	2.8	3.2	3.8
5	0.8	538	1.3	1.5	1.8	1387	3.4	3.9	4.5	1985	4.9	5.5	6.5	2319	5.7	6.5	7.6
6	1	763	2.3	2.6	3.0	1968	5.8	6.6	7.7	2816	8.3	9.4	11.1	3291	9.7	11.0	13.0
7	1	1095	3.8	4.3	5.0	2822	9.7	11.0	13.0	4039	13.9	15.8	18.5	4720	16.3	18.4	21.7
8	1.25	1389	5.5	6.2	7.3	3580	14.1	16.0	18.8	5123	20.2	22.9	26.9	5987	23.6	26.7	31.4
10	1.5	2200	10.8	12.3	14.4	5671	27.9	31.6	37.2	8115	39.9	45.2	53.2	9484	46.7	52.9	62.2
12	1.75	3197	18.9	21.4	25.2	8240	48.7	55.1	64.9	11792	69.6	78.9	92.8	13781	81.4	92.2	108.5
14	2	4379	30.2	34.2	40.2	11289	77.8	88.1	103.7	16154	111.3	126.1	148.4	18879	130.0	147.4	173.4
16	2	5943	47	53	62	15320	121	137	161	21924	173	196	230	25622	202	229	269
18	2.5	7301	65	73	86	18822	167	189	222	26934	239	270	318	31477	279	316	372
20	2.5	9286	91	104	122	23938	236	267	314	34256	337	382	449	40034	394	446	525
22	2.5	11509	125	141	166	29669	321	364	428	42457	460	521	613	49619	537	609	716
24	3	13372	158	179	211	34471	407	461	543	49329	582	660	777	57649	681	771	908
27	3	17428	232	262	309	44924	597	676	796	64288	854	968	1139	75132	998	1131	1331
30	3.5	21266	314	356	419	54819	809	917	1079	78448	1158	1312	1544	91680	1353	1534	1804
33	3.5	26310	427	484	570	67821	1101	1248	1468	97055	1576	1786	2101	113425	1842	2087	2455
36	4	30982	549	622	732	79866	1415	1603	1886	114291	2024	2294	2699	133569	2366	2681	3154

The torque values can only be achieved if nut (or tapped hole) has a proof load greater than or equal to the bolt's minimum ultimate tensile strength.
Clamp loads estimated as 75% of proof load for specified bolts.
Torque values listed in foot-pounds .
Torque values calculated from formula T=KDF where; K=0.15 for "lubricated" condition, K=0.17 for zinc plated and dry condition (or as-received for the 12.9), K=0.20 for plain and dry condition

Caution: All material included in this chart is advisory only, and its use by anyone is voluntary. In developing this information, Fastenal has made a determined effort to present its contents accurately. Extreme caution should be used when using a formula for torque/tension relationships. Torque is only an indirect indication of tension. Under/over tightening of fasteners can result in costly equipment failure or personal injury.

Rev 3-4-09

DEMAND
BRILLIANCE

DIAMONDMOWERS.COM