PARTS BOOK

ROTARY HEADS

• 50" • BOOM MOUNT • SERIAL #XXXXX+ •

DIAMOND MOWERS, LLC
350 E 60th St. North
Sioux Falls, SD 57104

FOR WARRANTY CALL DIAMOND MOWERS DIRECT:
888-960-0364
OUR TECHNICIANS WILL DIAGNOSE YOUR SITUATION
OVER THE PHONE TO GET YOU UP AND RUNNING QUICKLY.

Phone: 605-977-3300
Fax: 605-655-5870
www.diamondmowers.com

DEMAND BRILLIANCE.

© DIAMOND MOWERS, LLC

Foreword

This manual contains the parts breakdown and identification of the various components and structures that make up your mower implement.

The illustrations, drawings, and diagrams in this manual are based on the latest information available at the time of publication. Your machine may have product improvements and features not yet contained in this parts manual.

Diamond Mowers, LLC reserves the right to make changes at any time without notice or obligation.

Diamond Mowers, LLC™ and Wetblade™ are trademarks of Diamond Mowers, LLC.

This manual should be consulted prior and while assembling the unit, and anytime parts or assembly clarification is needed.

Copyright© 2016 Diamond Mowers, LLC

All rights reserved. While every precaution has been taken in the preparation of this manual, the publisher assumes no responsibility for errors or omissions. No part of this book covered by the copyrights heron may be reproduced or copied in any form or by any means – graphic, electronic, or mechanical, including photocopying, taping, or information storage and retrieval systems – without written permission of the publisher.

Table of Contents

ROTARY HEADS 4
- BOOM ROTARY HEAD - 50" DIRECT DRIVE 5
- ROTARY HEAD - 50" DECK, DECAL IDENTIFICATION 6
- BOOM ROTARY HEAD - 50" BLADE CONFIGURATIONS 7
- SAW BLADE ATTACHMENT (OPTIONAL) - BOOM ROTARY HEADS 50" 9
- HYDRAULIC TRAPDOOR (OPTIONAL) - BOOM ROTARY HEADS 50" 10

DRIVE ASSEMBLIES 11
- DRIVE ASSEMBLY - 50" ROTARY MOWER (WHEEL LOADER POWERED BOOM ONLY) 12

DECK ASSEMBLIES 13
- 30-0515 - MOTOR ASSEMBLY 14
- 30-0532 - MOTOR ASSEMBLY 15
- 35-0088 - DIRECT DRIVE SPINDLE 16

LIFT ASSEMBLIES 17
- 14-0010 - 2X8 TIE-ROD CYLINDER 18

ROTARY HEADS

Diamond MOWERS™

BOOM ROTARY HEAD - 50" DIRECT DRIVE

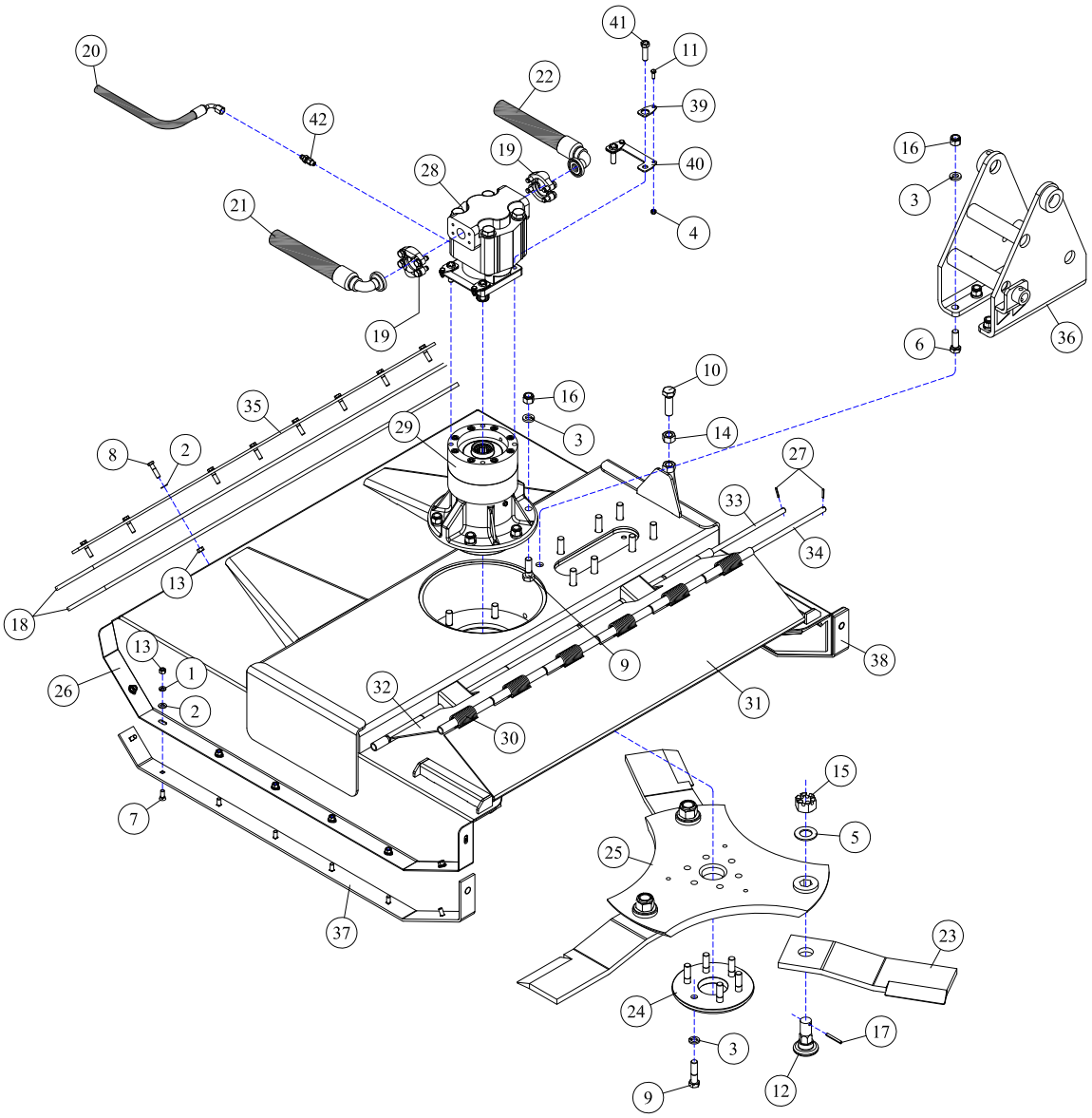

REF#	PARTS DESCRIPTION	REQ	PART #
1	3/8 LOCK WASHER	18	11-0005
2	5/16 FLAT WASHER	25	11-0015
3	5/8 H.S. LOCK WASHER	20	11-0043
4	1/4 NC NYLOCK NUT	4	11-1022
5	1-1/8 SAE H.S. FLAT WASHER	3	11-0057
6	5/8 X 2 H.S. NF HEX CAPSCREW	8	11-0508
7	PLOW BOLT	16	11-0804
8	3/8 X 1-3/4 NC HEX CAPSCREW	9	11-0521
9	5/8 X 2-1/4 NF H.S. HEX CAPSCREW	12	11-0691
10	3/4 X 4 NC HEX CAPSCREW	1	11-0557
11	1/4 X 3/4 NC HEX CAP	4	11-0588
12	BLADE BOLT - HEX BASE	3	11-0759
13	3/8 NC HEX NUT	25	11-1001
14	3/4 NC HEX NUT	1	11-1033
15	1-1/8 H.S. NF SLOTTED HEX NUT	3	11-1050
16	5/8 H.S. NF STOVER NUT	14	11-1143
17	1/4 X 2 ROLLPIN	3	11-2005
18	FLAP	2	18-0015
19	#20 FLANGE KIT	2	21-2105
20	HOSE 3/8 X 62 (3/8FJIC-90DEG X 1/2MJIC)	1	21-4304
21	HOSE 1 X 65 (1FJIC X #20FLG-90DEG)	1	21-2516
22	HOSE 1 X 57 (1FJIC X #20FLG-90DEG)	1	21-2517

REF#	PARTS DESCRIPTION	REQ	PART #
23	5/8" BRUSH BLADE	3	22-0006
24	BOLT PROTECTOR	1	24-0004
25	50" TRI-HEX DISH	1	24-0085
26	50" DECK SHELL	1	25-0051
27	5/32 X 1 ROLL PIN	4	11-2054
28	MOTOR 365" 1-1/2" GEARS, SPLINE SHAFT	1	30-0515
	(Excluding wheel loader-powered booms.)		
29	SPINDLE ASSEMBLY	1	35-0088
30	TORSION SPRING	6	36-0003
31	FRONT SHIELD	1	41-0007
32	REAR SHIELD	1	41-0008
33	TRAP DOOR ROD, REAR	1	41-0009
34	TRAP DOOR ROD, FRONT	1	41-0010
35	FLAP RETAINING BAR	1	41-0030
36	MAST	1	41-0195
37	RIGHT SKID SHOE	1	42-0007
38	LEFT SKID SHOE	1	42-0008
39	MOTOR BOLT LOCK TAB	4	31-0503
40	MOTOR BOLT LOCK BASE	2	31-0504
41	1/2-20 X 1-3/4 H.S. NF HEX CAP GR.8	4	11-0664
42	ADAPTER, 1/4MOR X 3/8MJIC	1	21-1597
43	BLADE KIT (Includes 5, 12, 15, 17, & 23)	1	44-0228

ROTARY HEAD - 50" DECK, DECAL IDENTIFICATION

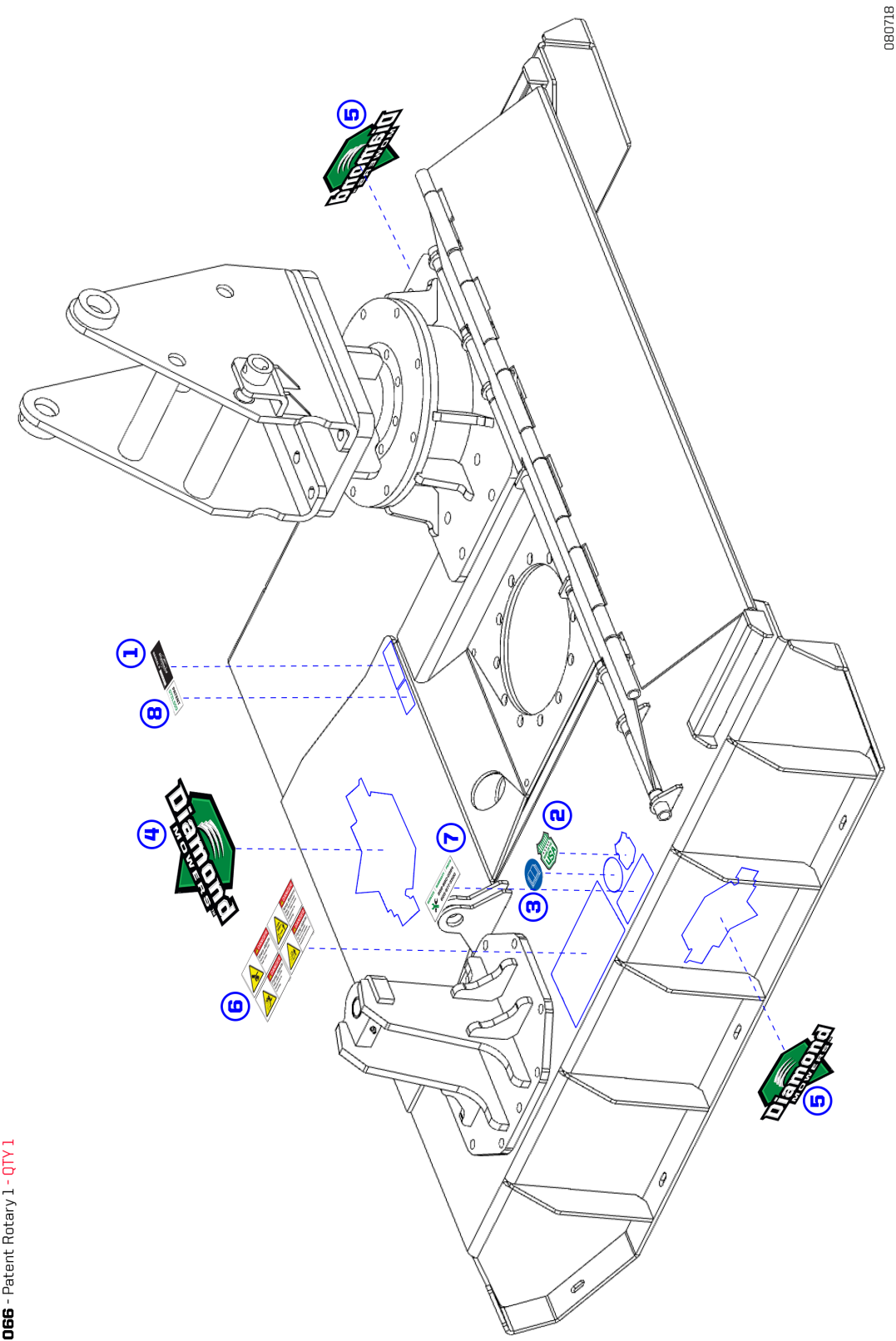

① **SERIAL NUMBER LABEL** - (not included in kit) - QTY 1
② **PART #15-0055** - Made In USA - QTY 1
③ **PART #15-0058** - Read Manual - QTY 1
④ **PART #15-0053** - Diamond Mowers Logo 13" - QTY 1
⑤ **PART #15-0050** - Diamond Mowers Logo 7" - QTY 2
⑥ **PART #15-0057** - Decal Group Horizontal - QTY 1
⑦ **PART #15-1016** - Warranty - QTY 1
⑧ **PART #15-0066** - Patent Rotary 1 - QTY 1

BOOM ROTARY HEAD - 50" BLADE CONFIGURATIONS

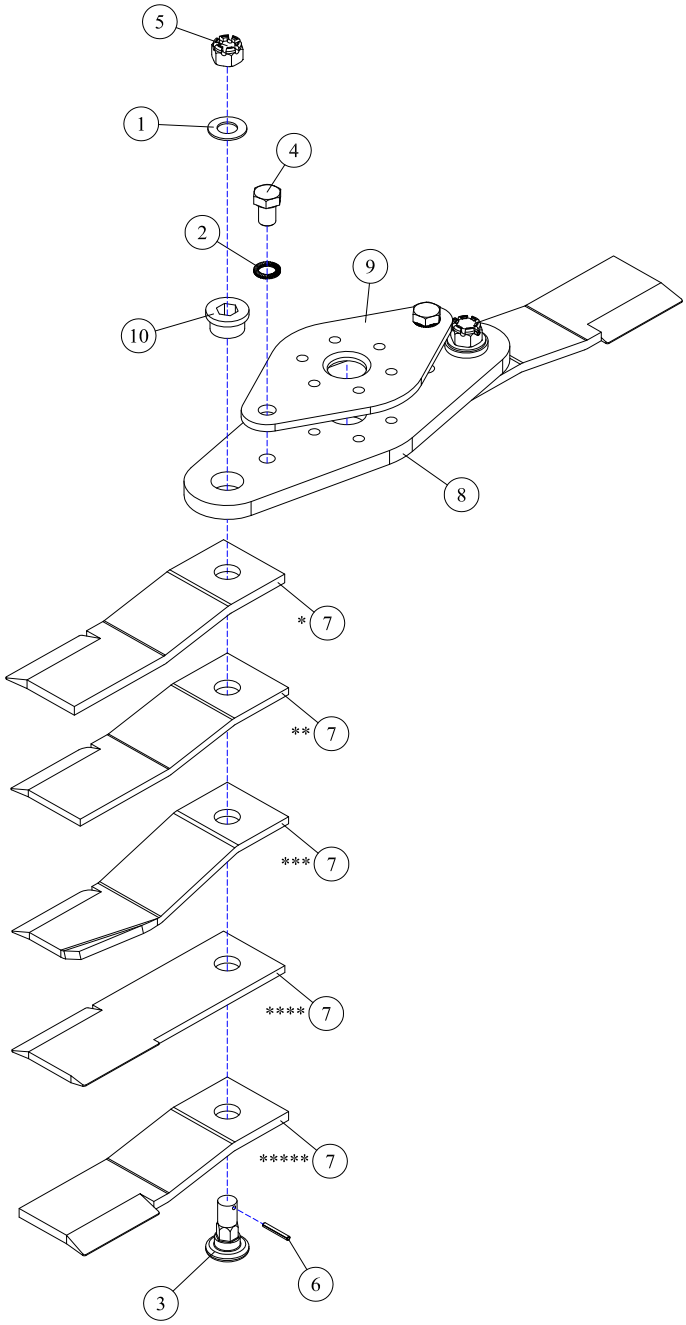

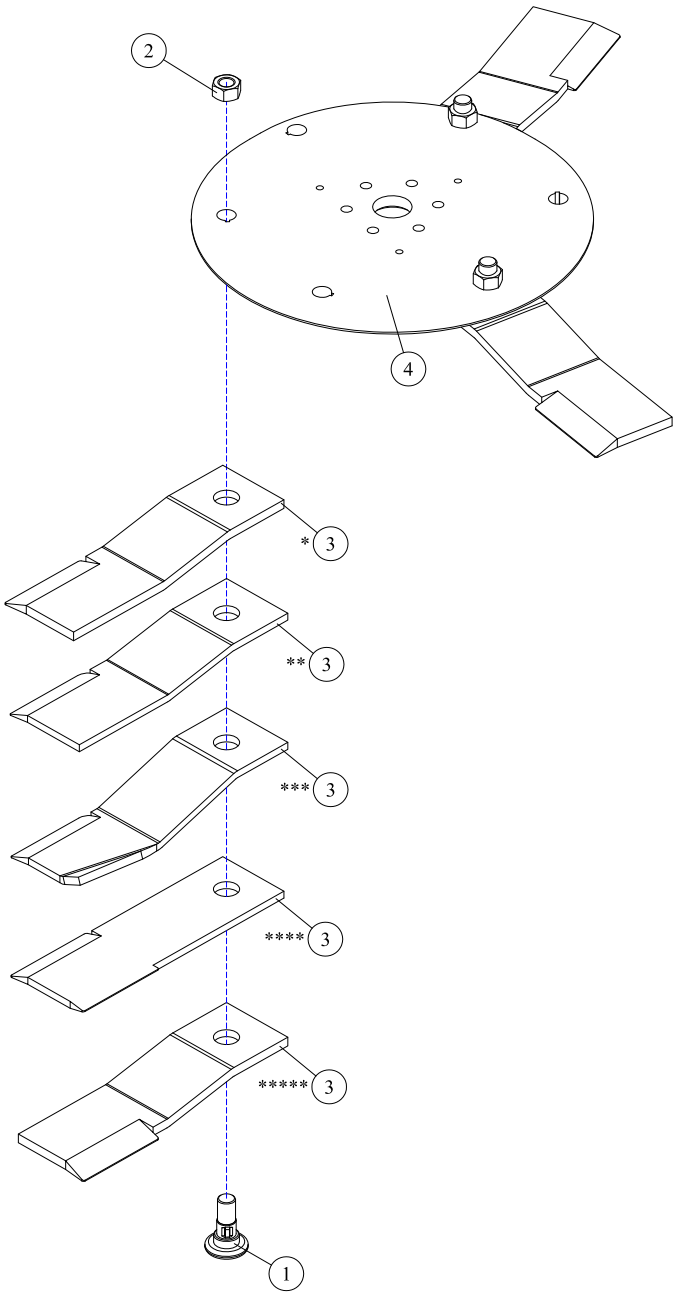

REF#	PARTS DESCRIPTION	REQ	PART #
1	1-1/8 H.S. FLAT WASHER	2	11-0057
2	1" NORDLOCK WASHER	2	11-0059
3	BLADE MOUNTING BOLT	2	11-0759
4	1 X 1-1/2 NF H.S. HEX CAP	2	11-0772
5	BLADE MOUNTING NUT	2	11-1050
6	1/4 X 2 ROLLPIN	2	11-2005
7	**KNIFE**		
*	50" BRUSH BLADE - 5/8"	3	22-0006
**	50" BRUSH KNIFE - 1/2"	3	22-0003
***	50" GRASS KNIFE, HIGH SUCTION - 1/2"	3	22-0005
****	50" BI-DIRECTIONAL BLADE - 1/2"	3	22-0012
*****	50" BRUSH KNIFE - REVERSE ROTATION - 5/8"	3	22-0017
8	BLADE BAR, BOTTOM	1	24-0097
9	BLADE BAR, TOP	1	31-0097
10	REPLACEABLE HEX INSERT	Avail	90-7010

REF#	PARTS DESCRIPTION	REQ	PART #
1	BLADE BOLT - 1-1/8 KEYED	3	11-0503
2	1-1/8 NF NYLOCK NUT	3	11-1008
3	**KNIFE**		
*	50" BRUSH BLADE - 5/8"	3	22-0006
**	50" BRUSH KNIFE - 1/2"	3	22-0003
***	50" GRASS KNIFE, HIGH SUCTION - 1/2"	3	22-0005
****	50" BI-DIRECTIONAL BLADE - 1/2"	3	22-0012
*****	50" BRUSH KNIFE - REVERSE ROTATION - 5/8"	3	22-0017
4	BLADE DISH	1	24-0002

BOOM ROTARY HEAD - 50" BLADE CONFIGURATIONS

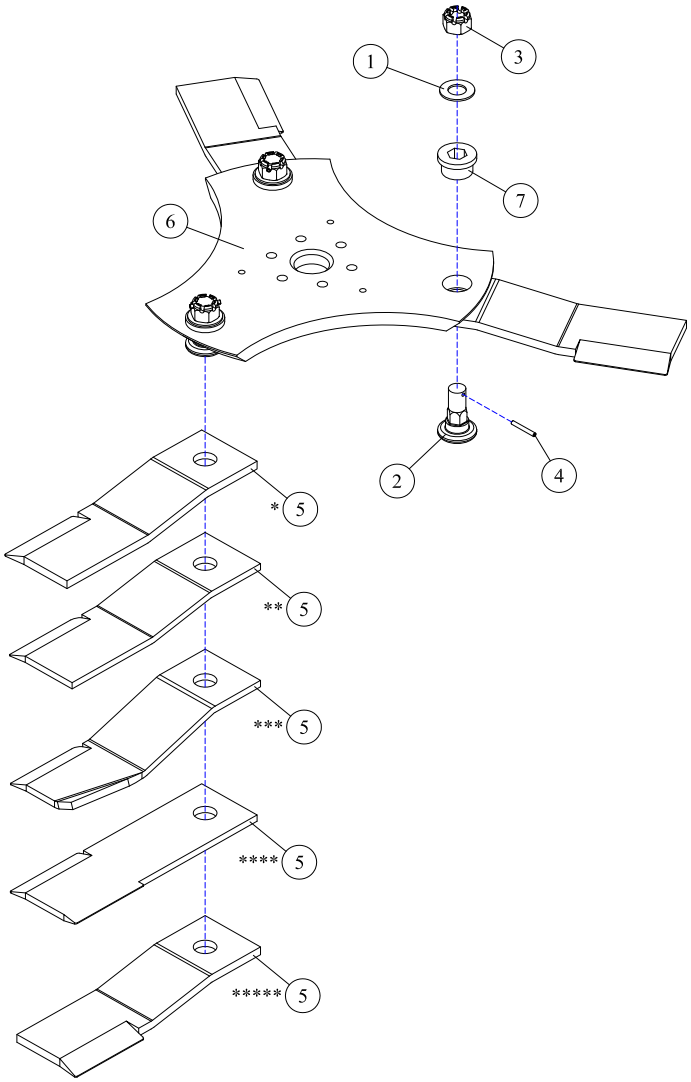

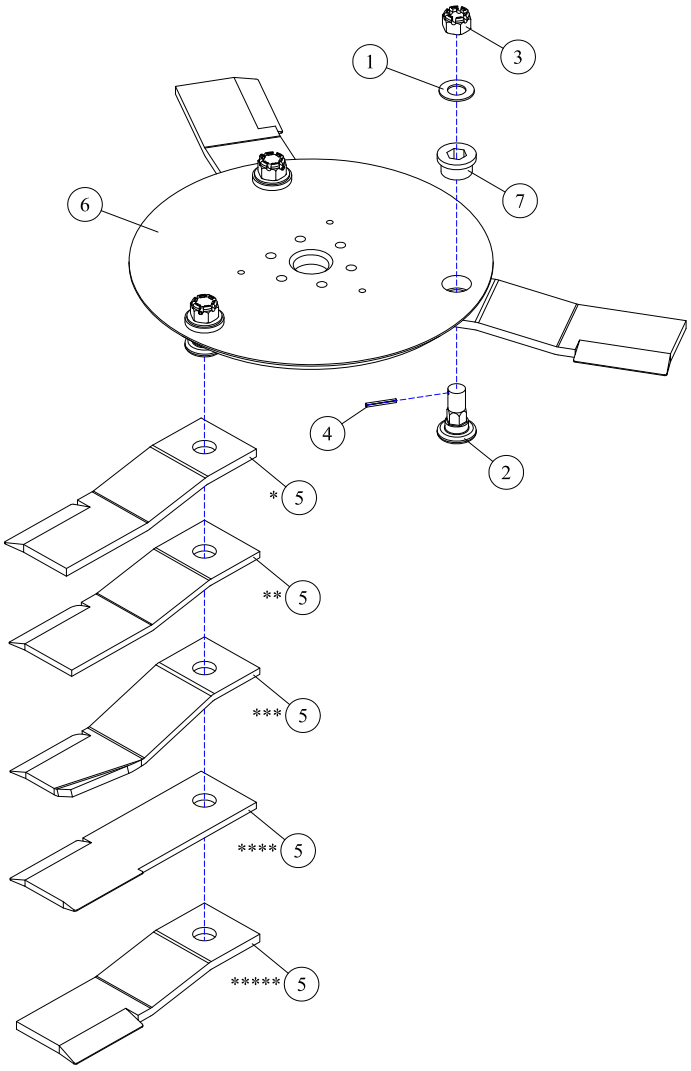

REF#	PARTS DESCRIPTION	REQ	PART #
1	1-1/8 H.S FLAT WASHER	3	11-0057
2	BLADE MOUNTING BOLT	3	11-0759
3	BLADE MOUNTING NUT	3	11-1050
4	ROLLPIN	3	11-2005
5	**KNIFE**		
*	50" BRUSH BLADE - 5/8"	3	22-0006
**	50" BRUSH KNIFE - 1/2"	3	22-0003
***	50" GRASS KNIFE, HIGH SUCTION - 1/2"	3	22-0005
****	50" BI-DIRECTIONAL BLADE - 1/2"	3	22-0012
*****	50" BRUSH KNIFE - REVERSE ROTATION - 5/8"	3	22-0017
6	D3 50" TRI-HEX DISH	1	24-0085
7	REPLACEABLE HEX INSERT	Avail	90-7010

REF#	PARTS DESCRIPTION	REQ	PART #
1	1-1/8 H.S FLAT WASHER	3	11-0057
2	BLADE MOUNTING BOLT	3	11-0759
3	BLADE MOUNTING NUT	3	11-1050
4	ROLLPIN	3	11-2005
5	**KNIFE**		
*	50" BRUSH BLADE - 5/8"	3	22-0006
**	50" BRUSH KNIFE - 1/2"	3	22-0003
***	50" GRASS KNIFE, HIGH SUCTION - 1/2"	3	22-0005
****	50" BI-DIRECTIONAL BLADE - 1/2"	3	22-0012
*****	50" BRUSH KNIFE - REVERSE ROTATION - 5/8"	3	22-0017
6	D3 50" ROUND DISH	1	24-0100
7	REPLACEABLE HEX INSERT	Avail	90-7010

SAW BLADE ATTACHMENT (OPTIONAL) - BOOM ROTARY HEADS 50”

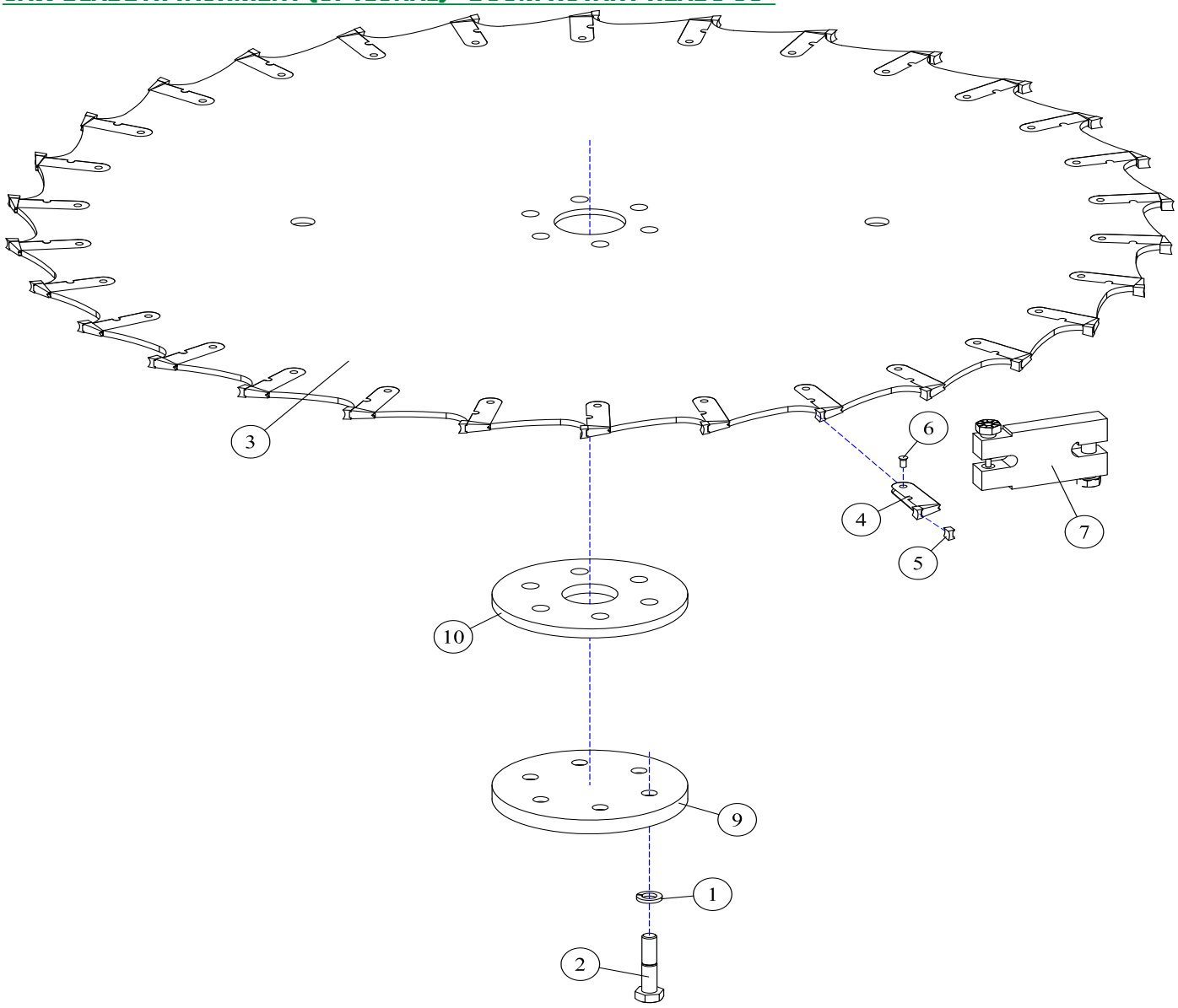

REF#	PARTS DESCRIPTION	REQ	PART #
1	5/8 H.S. LOCK WASHER	6	11-0043
2	5/8 X 2 NF H.S. CAPSCREW	6	11-0508
3	48" SAW BLADE	1	22-3001
4	CARBIDE TIP HOLDER	30	22-3002
5	CARBIDE REPLACEMENT TIP	30	22-3004
6	RIVET	30	22-3005
7	RIVET REMOVAL TOOL	Avail	22-3006
8	SHARPENING TOOL (NOT SHOWN)	Avail	22-3007
9	BOLT PROTECTOR	1	24-0004
10	BOLT PROTECTOR SPACER	1	24-0215

HYDRAULIC TRAPDOOR (OPTIONAL) - BOOM ROTARY HEADS 50”

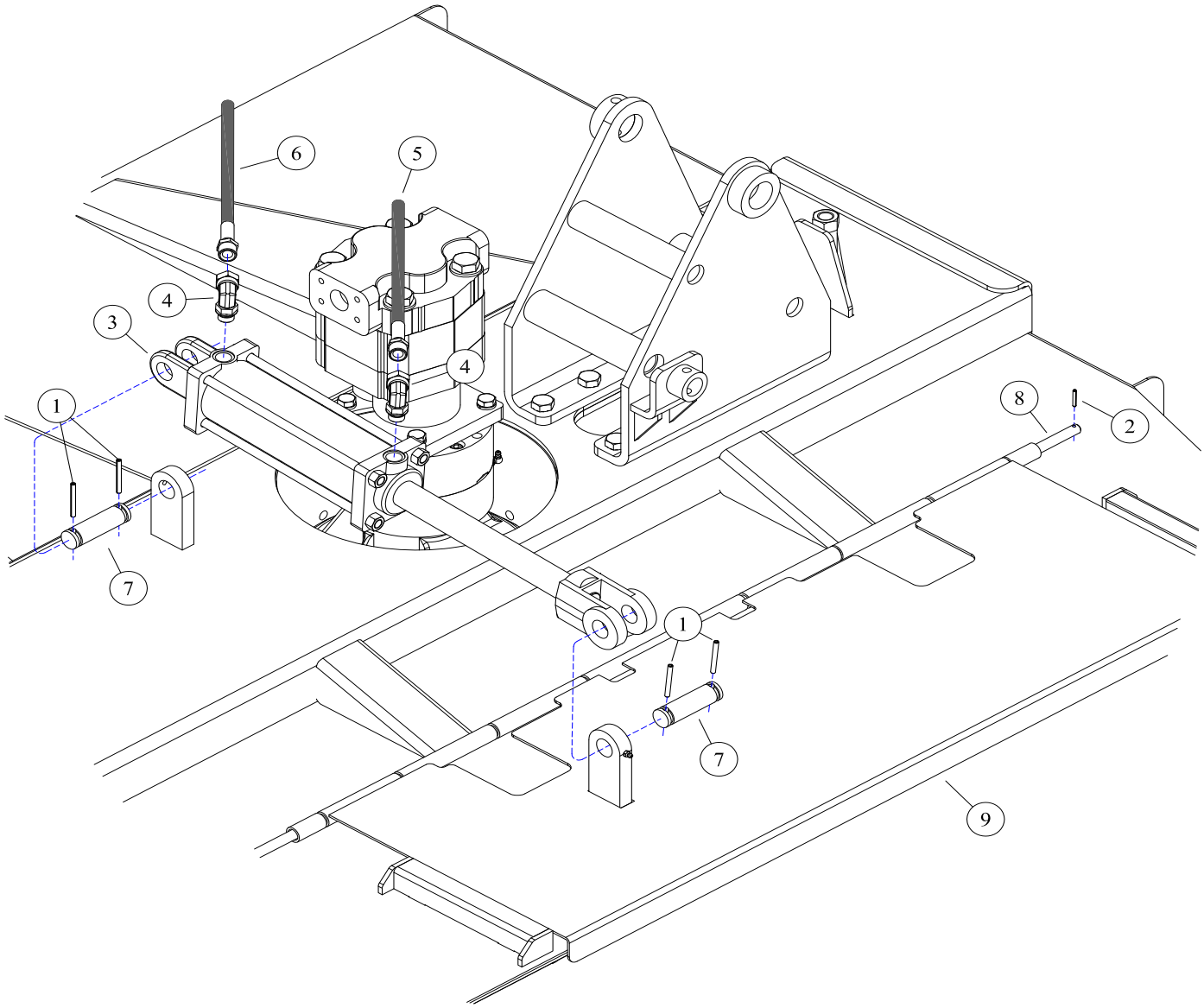

REF#	PARTS DESCRIPTION	REQ	PART #
1	1/4 X 2 ROLL PIN	4	11-2005
2	5/32 X 1 ROLL PIN	2	11-2054
3	2 X 8 CYLINDER	1	14-0010
4	1/2ADJ-OR X 1/2FPX-90DEG, FITTING	2	21-1119
5	HOSE 1/4 X 77 (1/2MP X 5/16MJIC)	1	21-2307
6	HOSE 1/4 X 66 (1/2MP X 5/16MJIC)	1	21-2405
7	CLEVIS PIN, 1 X 3-1/2	2	27-0004
8	TRAP DOOR ROD, REAR	1	41-0009
9	HYDRAULIC SHIELD	1	41-0222

DRIVE ASSEMBLIES

Diamond MOWERS™

DRIVE ASSEMBLY - 50" ROTARY MOWER (WHEEL LOADER POWERED BOOM ONLY)

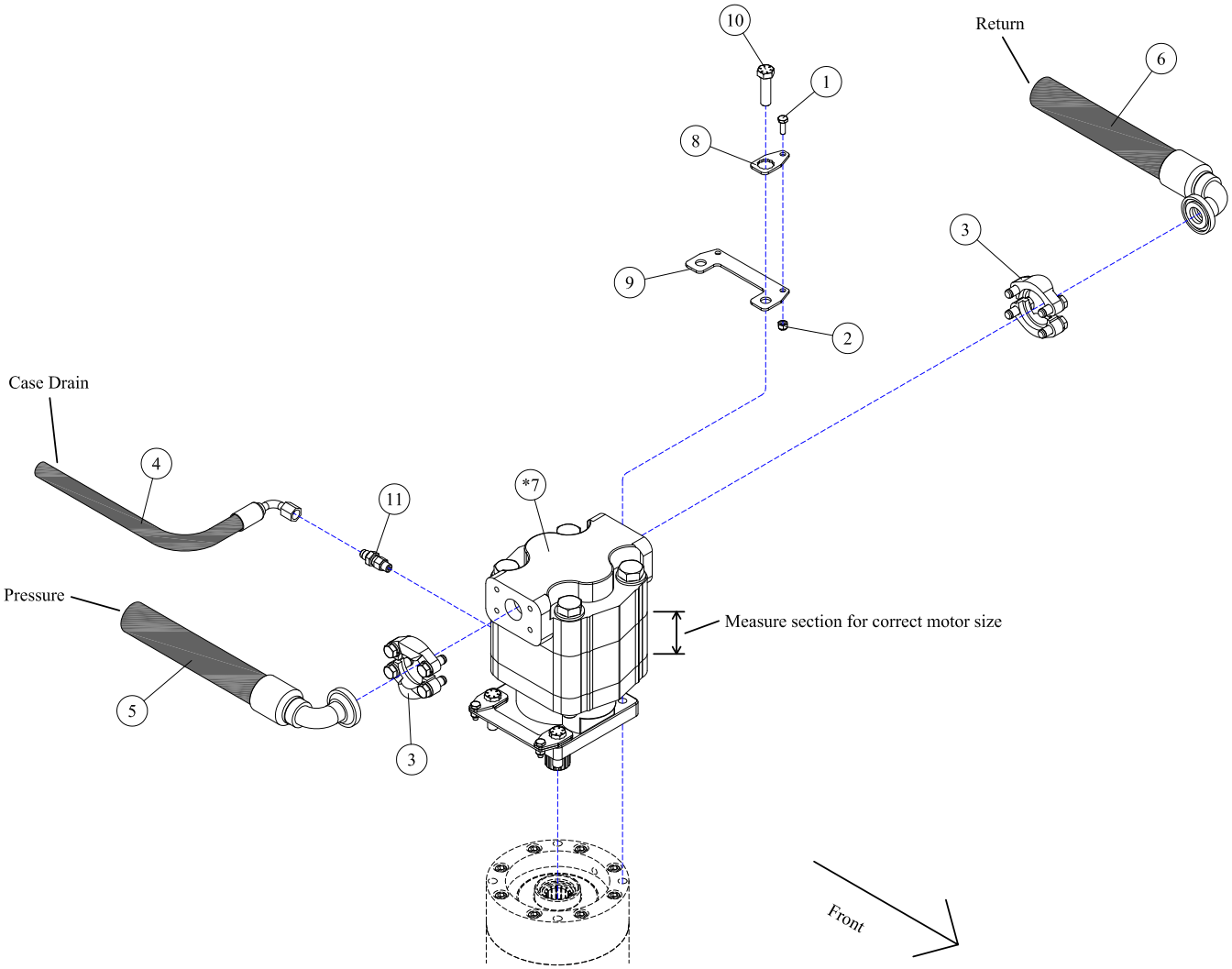

* Note: These are the flow rates AFTER the oil has passed through the 4:1 divider.

REF#	PARTS DESCRIPTION	REQ	PART #
1	1/4 X 3/4 NC HEX CAP	4	11-0588
2	1/4 NC NYLOCK NUT	4	11-1022
3	#20 FLANGE KIT	2	21-2105
4	HOSE 3/8 X 62 (3/8FJIC-90DEG X 1/2MJIC)	1	21-4304
5	HOSE 1 X 65 (1FJIC X #20FLG-90DEG)	1	21-2516
6	HOSE 1 X 57 (1FJIC X #20FLG-90DEG)	1	21-2517

REF#	PARTS DESCRIPTION	REQ	PART #
* 7	**MOTOR**		
	M365, 1-1/4" GEAR SET, 1-3/4" SECT, **30-39 GAL/MIN**	1	30-0532
	M365, 1-1/2" GEAR SET, 2" SECT, **40-45 GAL/MIN**	1	30-0515
8	MOTOR BOLT LOCK TAB	4	31-0503
9	MOTOR BOLT LOCK BASE	2	31-0504
10	1/2-20 X 1-3/4 H.S. NF HEX CAP GR.8	4	11-0664
11	ADAPTER, 1/4MOR X 3/8MJIC	1	21-1597

DECK ASSEMBLIES

Diamond MOWERS™

30-0515 - MOTOR ASSEMBLY

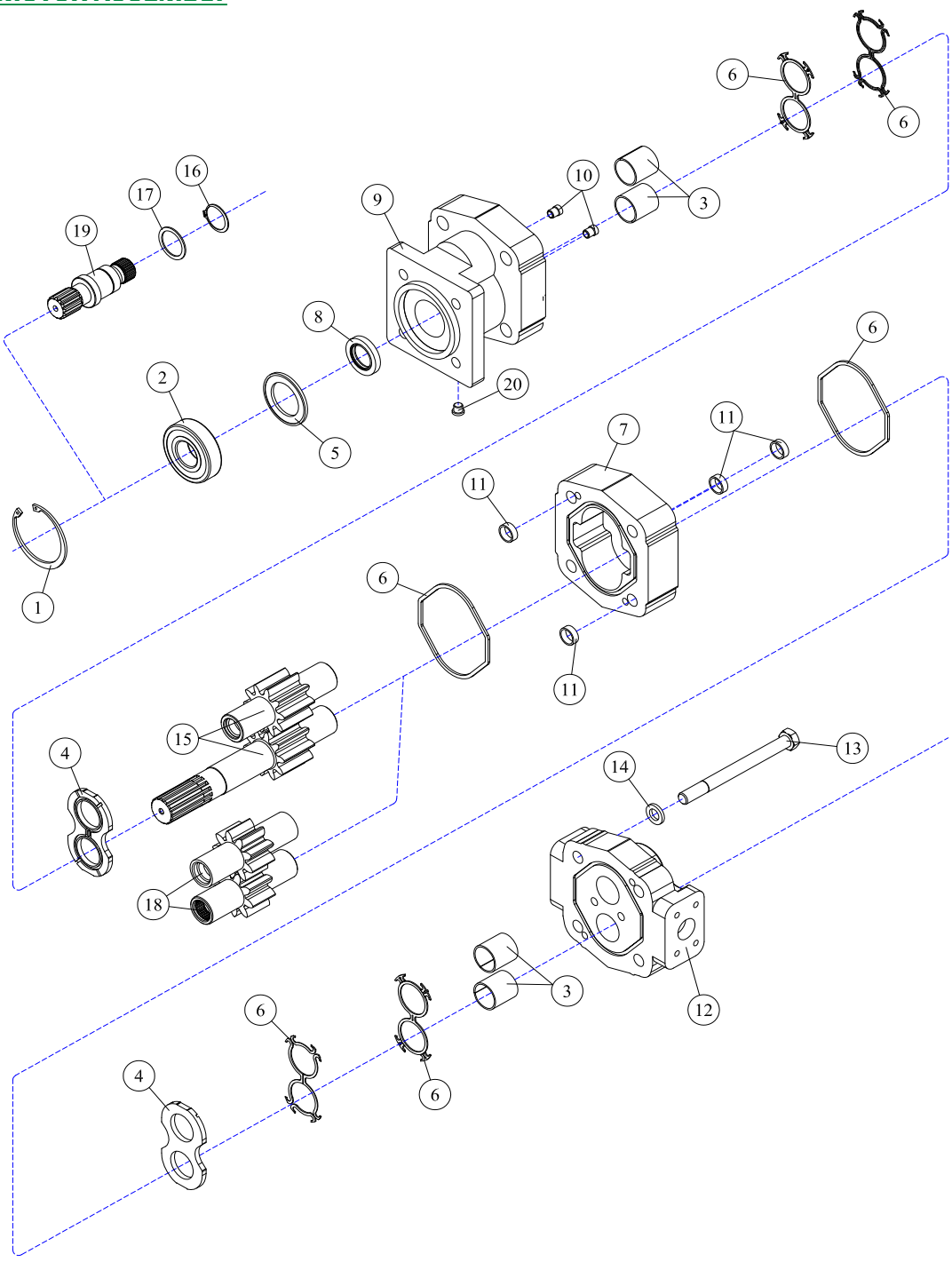

REF#	PARTS DESCRIPTION	REQ	PART #
1	SNAP RING	1	30-1009
2	OUTBOARD BEARING	1	30-1010
3	BUSHING	4	30-1011
4	THRUST PLATE	2	30-1012
5	SEAL RETAINER	1	30-1017
6	M365 SEAL KIT	Avail	30-1021
7	GEAR HOUSING	1	30-1023
8	**SHAFT SEAL**		
	150 PSI (included in M365 seal kit)	1	30-1210
	500 PSI	1	30-1156
9	SHAFT END COVER	1	30-1086
10	CHECK ASSEMBLY	2	30-1087
11	ALIGNMENT BUSHING	4	30-1090

REF#	PARTS DESCRIPTION	REQ	PART #
12	PORT END COVER	1	30-1091
13	STUD	4	30-1092
14	WASHER	4	30-1093
	GEAR SET OPTION A:		
15	1-1/2" GEAR SET	1	30-1159
	GEAR SET OPTION B:		
16	RETAINING RING	1	30-1019
17	WASHER	1	30-1020
18	1-1/2" GEAR SET	1	30-1022
19	CONTINENTAL SHAFT, SPLINED	1	30-1144
20	PLUG	1	30-1096
*	SEAL APPLICATOR TOOL (not shown)	Avail	30-1048

30-0532 - MOTOR ASSEMBLY

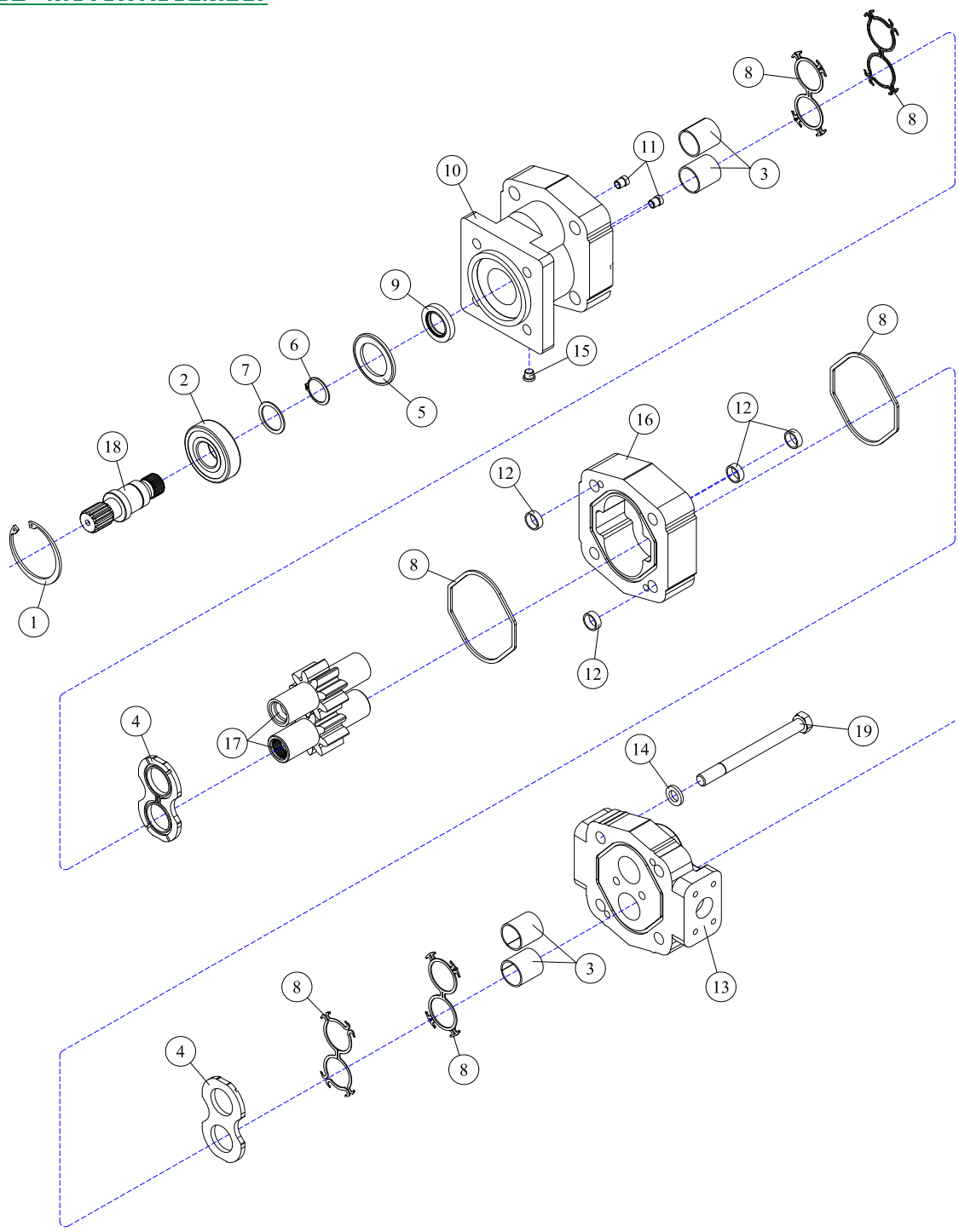

REF#	PARTS DESCRIPTION	REQ	PART #
1	SNAP RING	1	30-1009
2	OUTBOARD BEARING	1	30-1010
3	BUSHING	4	30-1011
4	THRUST PLATE	2	30-1012
5	SEAL RETAINER	1	30-1017
6	RETAINING RING	1	30-1019
7	WASHER	1	30-1020
8	M365 SEAL KIT	Avail	30-1021
9	150 PSI (included in M365 seal kit)	1	30-1210
10	SHAFT END COVER	1	30-1086

REF#	PARTS DESCRIPTION	REQ	PART #
11	CHECK ASSEMBLY	2	30-1087
12	ALIGNMENT BUSHING	4	30-1090
13	PORT END COVER	1	30-1091
14	WASHER	4	30-1093
15	PLUG	1	30-1096
16	GEAR HOUSING	1	30-1195
17	1-1/4" GEAR SET	1	30-1194
18	CONTINENTAL SHAFT, SPLINED	1	30-1144
19	STUD	4	Call

35-0088 - DIRECT DRIVE SPINDLE

Grease with #2 lithium based grease every 500hrs. Use 10 pumps (.44oz) into each of the two grease zerks.

Warning: Do not overgrease
Overgreasing will cause damage or premature failure of the bearings, housing & seals.

REF#	PARTS DESCRIPTION	REQ	PART #
1	BEARING	2	10-0055
2	LOCKING WASHER	1	11-0048
3	3/8 X 2-3/4 NC SKT HEAD CAPSCREW	8	11-0703
4	1/4 X 1/2 NC CAPSCREW	4	11-0741
5	2-1/2 SPANNER NUT	1	11-1037
6	LARGE SNAP RING	1	11-2021
7	SMALL SNAP RING	1	11-2022
8	PIPE PLUG	1	21-1136
9	1/8 X 90 GREASE ZERK	2	23-0005
10	UPPER SEAL	1	33-0035
11	LOWER SEAL	1	33-0057
12	SPINDLE HOUSING	1	35-0021
13	SEAL/MOTOR MOUNT	1	35-0022
14	ALIGNMENT PIN	2	35-0032
15	SPACER	1	35-0050
16	BOTTOM SEAL PLATE	1	35-0063
17	SPACER	1	35-0064
18	BOTTOM PLATE	1	35-0065
19	GREASE CATCH	1	35-0066
20	SPINDLE SHAFT COMPLETE	1	35-0090
*21	SPLINED INSERT KIT	1	35-0091
22	BREATHER	2	80-1016
23	3/8 LOCK WASHER GR 5	8	11-0005

* The splined insert kit includes the insert removal tool 11-0913.

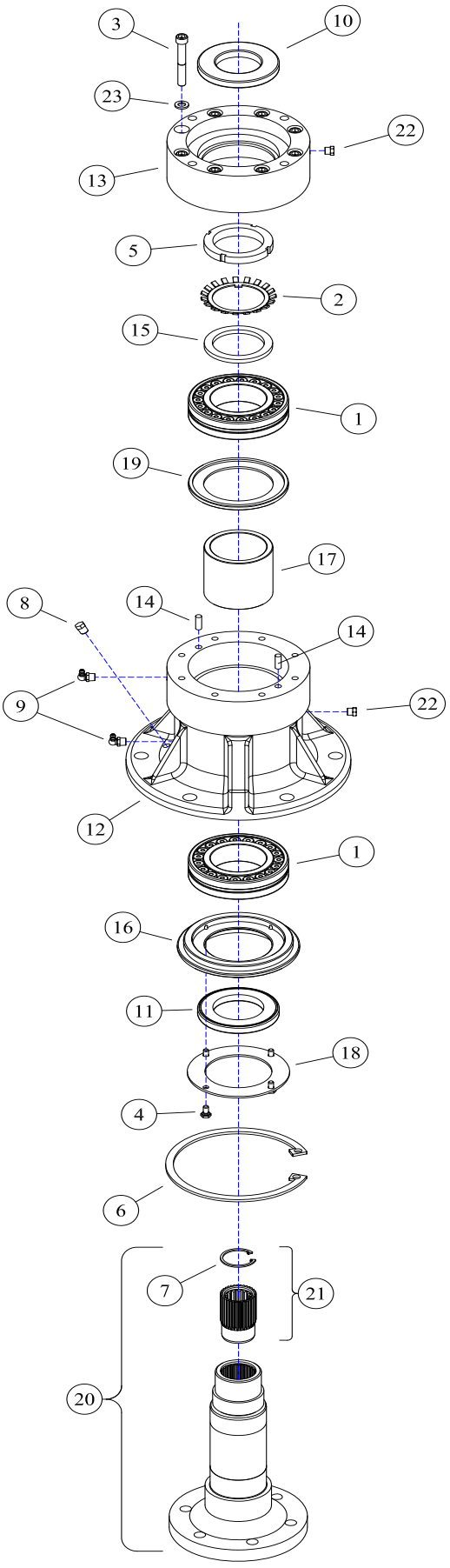

LIFT ASSEMBLIES

Diamond MOWERS™

14-0010 - 2X8 TIE-ROD CYLINDER

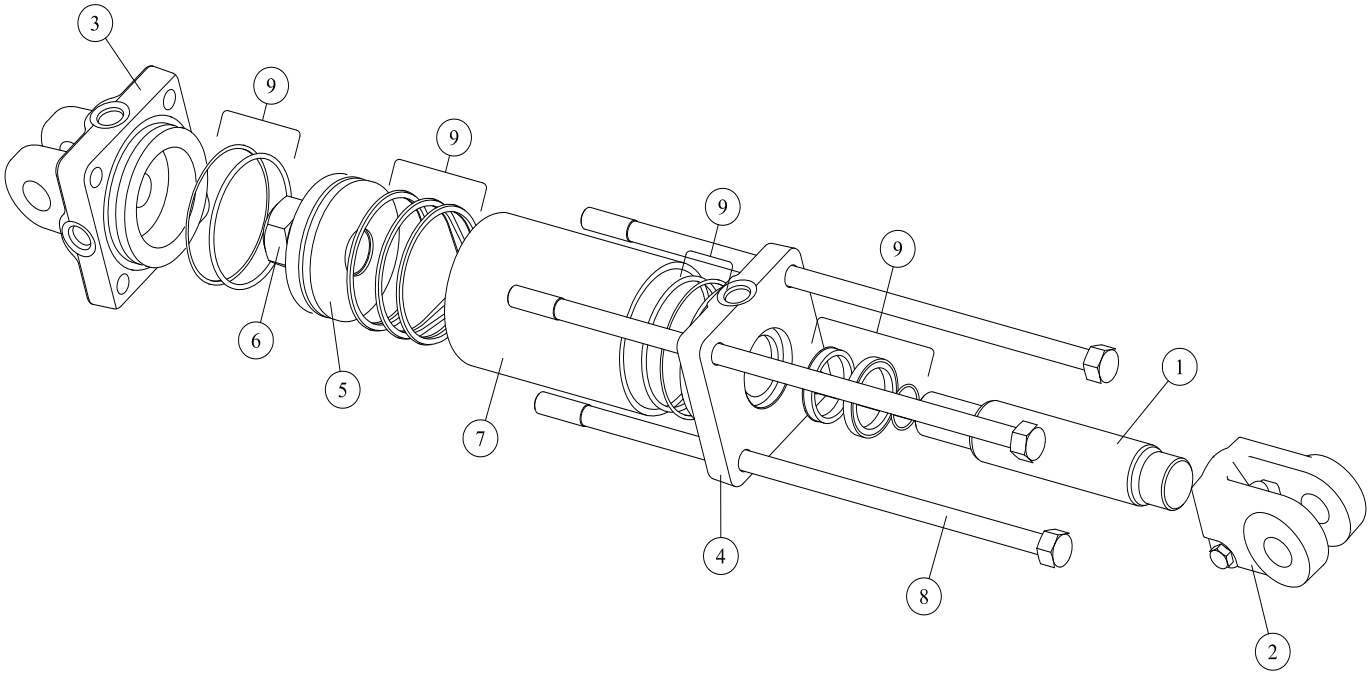

REF#	PARTS DESCRIPTION	REQ	PART #
1	PISTON ROD	1	14-1066
2	CLEVIS ASSEMBLY	1	14-1064
3	BUTT	1	14-1062
4	GLAND	1	14-1063
5	PISTON	1	14-1067
6	LOCKNUT	1	14-1068
7	TUBE	1	14-1172
8	TIE-ROD ASSEMBLY	4	14-1069
9	SEAL KIT	1	33-0025

(PAGE INTENTIONALLY BLANK)

100% SATISFACTION GUARANTEE
★ GET IT, LOVE IT, *or* LEAVE IT! ★

72-HOUR PARTS
SHIPPING GUARANTEE