PARTS BOOK

SKID-STEER ROTARY HEAD

84"(2134MM) ROTARY HEAD

DOC #15-1378 SERIAL #34508+

WARRANTY + SERVICE 888.960.0364
PARTS 888.960.0361

Diamond MOWERS™

DIAMONDMOWERS.COM

TABLE OF CONTENTS

ROTARY HEADS

DECK ASSEMBLY - HIGH FLOW 4
MOTOR - DECK SUBASSEMBLY 6
SPINDLE - DECK SUBASSEMBLY 8
CHAIN CURTAIN ASSEMBLY 9
DECAL ASSEMBLY 10

DECK ASSEMBLIES

MOTOR ASSEMBLY - 30-0518 12
SPINDLE ASSEMBLY - 35-0204 13

APPENDIX

O-RINGS - S.A.E. 15
S.A.E. TORQUE SPECIFICATIONS 16
METRIC TORQUE SPECIFICATIONS 16

ROTARY HEADS

DECK ASSEMBLY - HIGH FLOW

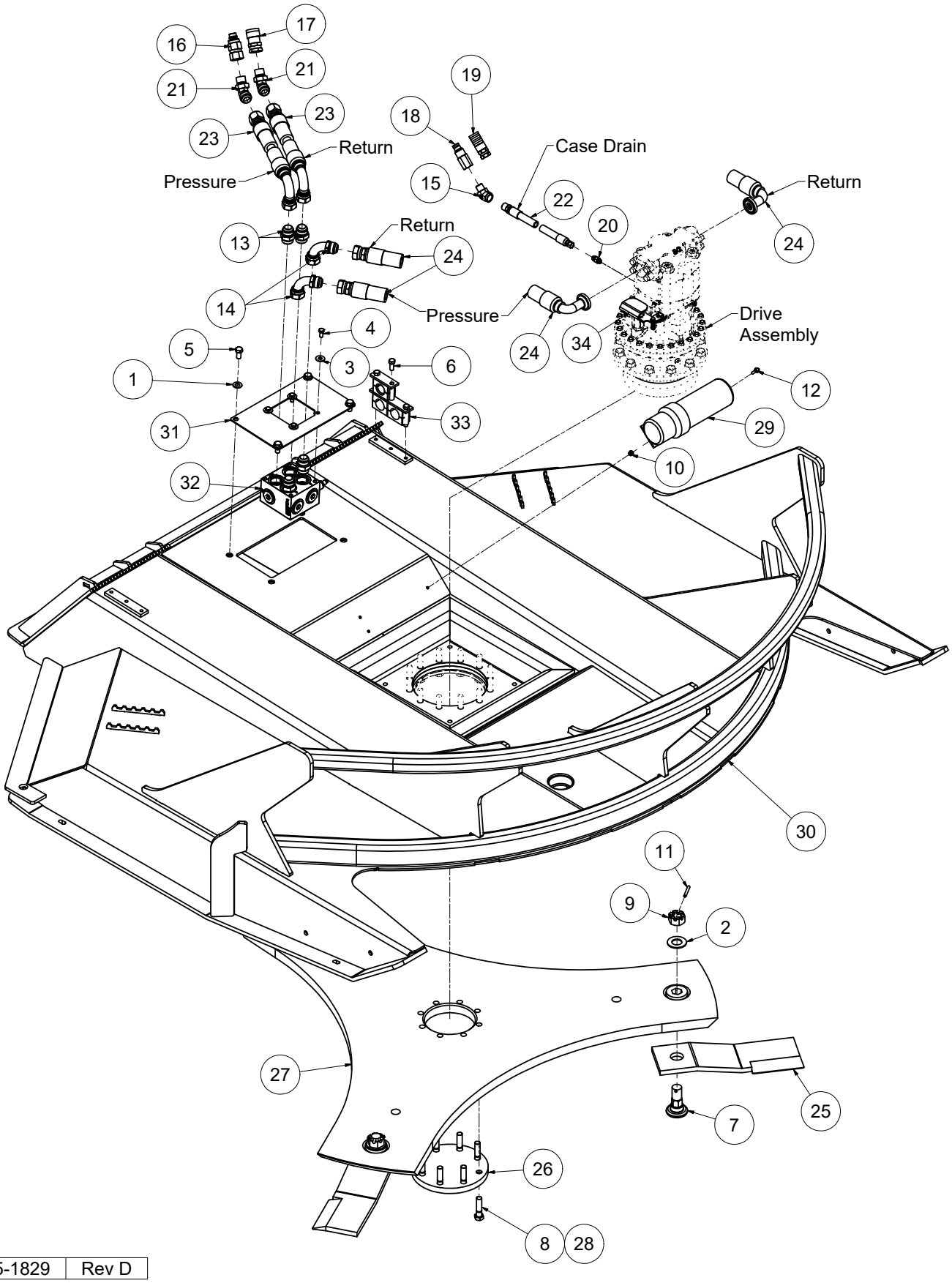

25-1829	Rev D

© Diamond Mowers®, LLC

DECK ASSEMBLY - HIGH FLOW

REF#	PARTS DESCRIPTION	REQ	PART#	TORQUE (ft-lbs)
1	1/2 X 1.062 GR 8 SAE FLAT WASHER, YELLOW ZINC	4	11-0042	
2	1-1/8 X 2.25 THRU-HARDENED SAE FW, YELLOW ZINC	3	11-0057	
3	3/8 THRU-HARDENED FLAT WASHER, YELLOW ZINC	4	11-0092	
4	3/8-16 X 3/4 GR 5 HEX CAP, ZINC	4	11-0545	31
5	1/2-13 X 1 GR 5 HEX CAP, ZINC	4	11-0569	75
6	7/16-14 X 1 GR 5, HEX CAP, ZINC	3	11-0584	49
7	1-1/8-12 NF HEX BASE D3 BLADE BOLT	3	11-0759	
8	5/8-11 X 2-1/2 GR 8 HEX CAP, YELLOW ZINC	8	11-0971	**212
9	1-1/8"-12 NF SLOTTED HEX NUT GR 8	3	11-1050	1444
10	1/4-20 GR 5 NYLOCK FLANGE NUT, ZINC	3	11-1090	
11	ROLL PIN, 1/4" X 2"	3	11-2005	
12	1/4-20 X 1 GR 5 HEX FLANGE BOLT, ZINC	3	11-2210	8.5
13	1MOR X 1MJIC, ADAPTER	4	21-1005	
14	1MJIC X 1FJIC-90DEG, FITTING 3-3/4	2	21-1258	
15	1/2MP X 1/2FP ADAPTER 45 DEG	1	21-1290	
16	1/2" MALE QUICK COUPLER X 3/4" SAE, FLAT FACE, NO SPILL	1	21-1559	
17	1/2" FEMALE QUICK COUPLER X 3/4" SAE, FLAT FACE, NO SPILL	1	21-1560	
18	3/8" MALE QUICK COUPLER, FLAT FACE, NO SPILL	1	21-1561	
19	3/8" FEMALE QUICK COUPLER, FLAT FACE, NO SPILL	1	21-1562	
20	ADAPTER, 1/4MOR X 3/8MJIC	1	21-1597	
21	1MJIC-45DEG X 3/4M-OR, FITTING	2	21-1654	
22	HOSE 3/8 X 118 (3/8FJIC X 1/2MP) KEVLAR	1	21-4613	
23	HOSE 1 X 91 (1FJIC X 1FJIC-90DEG)	2	21-4645	
24	HOSE 1 X 29 (#20FLG-90 X 1FJIC)	2	21-4646	
25	BRUSH BLADE - 5/8"	3	22-0006	
26	BOLT PROTECTOR, AUBURN	1	24-0228	
27	DISC, 84" D3	1	24-0301	
28	LOCTITE 262, .017 OZ (RED)	1	24-0382	
29	LARGE MANUAL CANISTER, 12" X 3.25"	1	24-0397	
30	DECK, D3 84" DLR PHASE 3	1	25-0350	
31	MANIFOLD CUTOUT ACCESS PLATE	1	31-1091	
32	MANIFOLD, ANTI-CAVITATION, 2800 PSI RELIEF, ATTACHMENT	1	39-0122	
33	1" HOSE CLAMP KIT WITH TOP CLAMP, NO BASE	1	44-0351	
34	MOTOR HARDWARE LOCK KIT	1	44-0916	
	OPTIONAL HOSES			
*	HOSE, 1 X 91, 4000 PSI (1FJIC X 1FJIC-90DEG) KEVLAR		21-4723	
*	HOSE, 1 X 29, 4000 PSI (#20FLG-90DEG X 1 FJIC) KEVLAR		21-4724	

* NOT SHOWN

** CRITICAL TORQUE VALUES **MUST** BE FOLLOWED.

25-1829	Rev D

© Diamond Mowers®, LLC

MOTOR - DECK SUBASSEMBLY

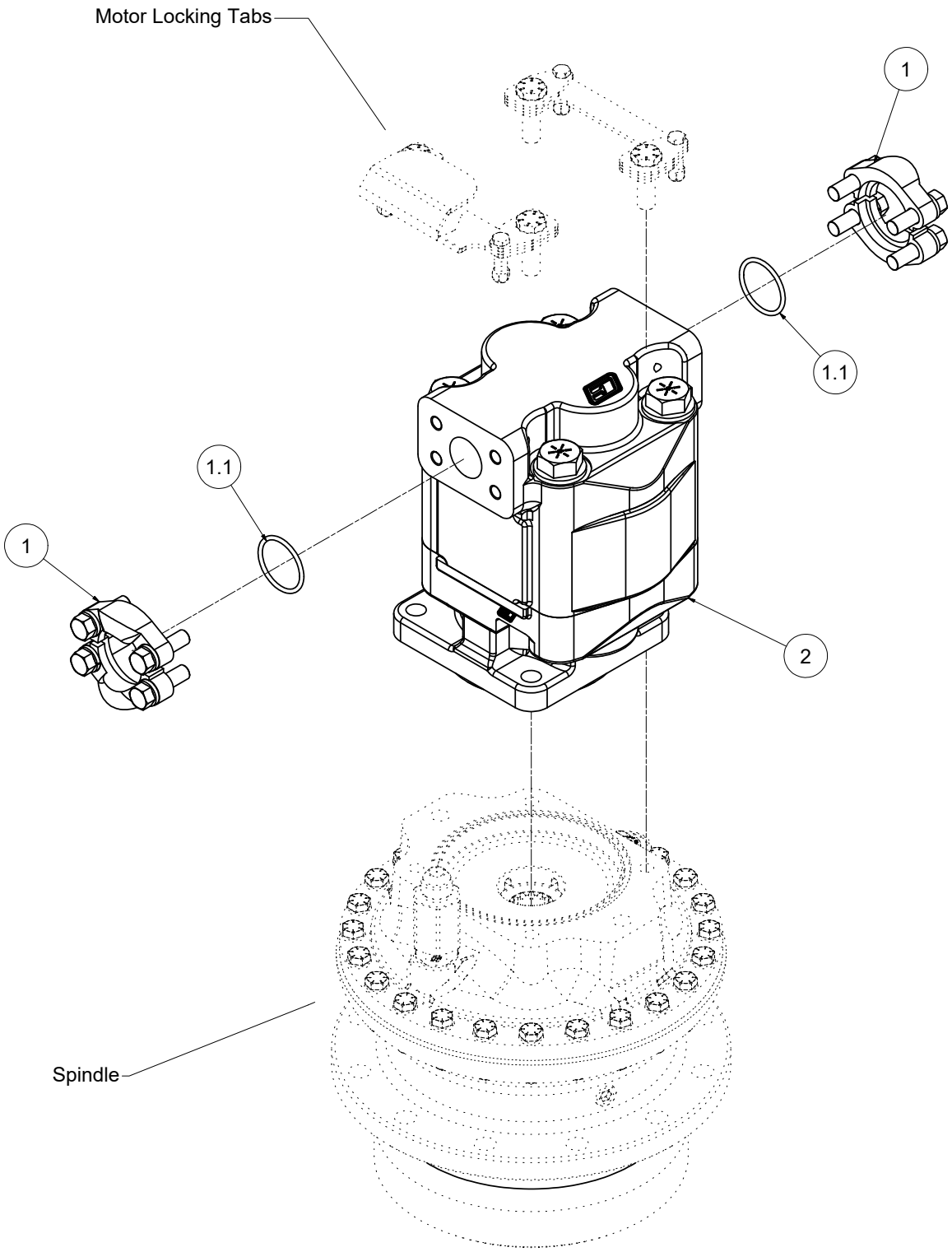

30-0520-2	Rev A

© Diamond Mowers®, LLC

MOTOR - DECK SUBASSEMBLY

REF#	PARTS DESCRIPTION	REQ	PART#	TORQUE (ft-lbs)
1	#20 FLANGE KIT	2	21-2105	49
1.1	0-RING, #20 FLANGE	2	33-0013	
2	MOTOR	1		
	SKID LOADER 60"			
	M365, 1-3/4" GEAR, 1-1/4 14 SPLINE SHAFT, HD HOUSING		30-0520	
	29-35 GPM (110-132 LPM)			
	M365, 2-1/4" GEAR, 1-1/4 14 SPLINE SHAFT, HD HOUSING		30-0524	
	36-41 GPM (136-155 LPM)			
	M365 MOTOR, 2-1/2" GEAR SET SPLINED SHAFT		30-0518	
	42-46 GPM (159-174 LPM)			
	SKID LOADER 72"			
	M365, 2-1/4" GEAR, 1-1/4 14 SPLINE SHAFT, HD HOUSING		30-0524	
	29-34 GPM (110-129 LPM)			
	M365, 2-1/2" GEAR SET SPLINED SHAFT		30-0518	
	35-41 GPM (132-155 LPM)			
	SKID LOADER 84"			
	M365, 2-1/2" GEAR SET SPLINED SHAFT		30-0518	
	32-41 GPM (122-155 LPM)			

30-0520-2	Rev A

© Diamond Mowers®, LLC

SPINDLE - DECK SUBASSEMBLY

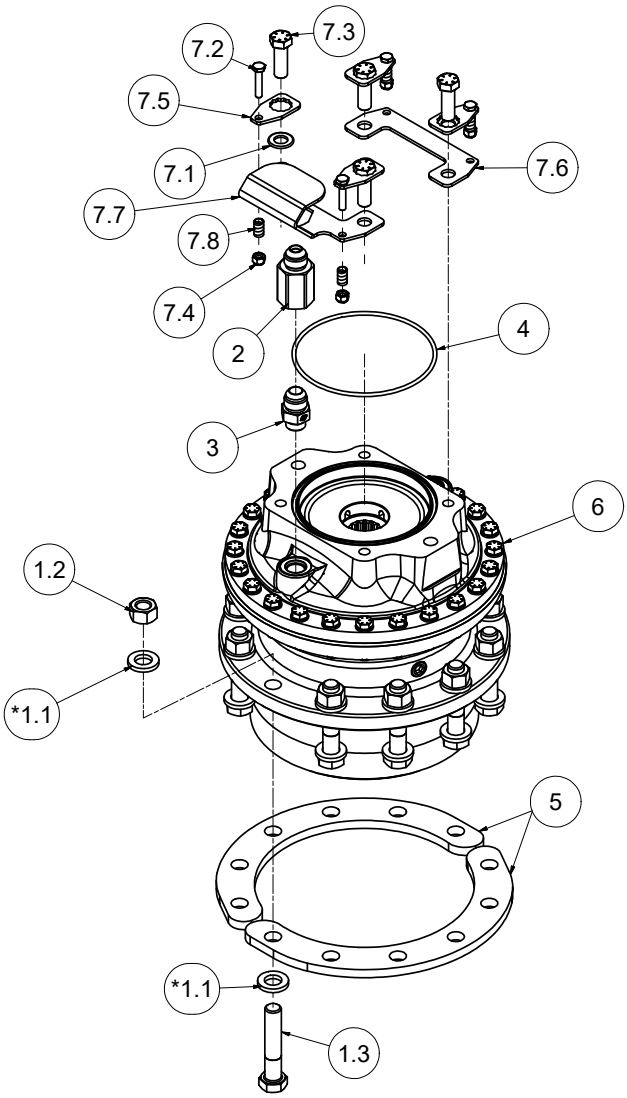

REF#	PARTS DESCRIPTION	REQ	PART#
1	BOLT KIT - SPINDLE 1" (DLR) SHELL	1	11-3625
*1.1	M16 DIN EN 14399 THRU-HARDENED FW, ECOGUARD	24	11-0102
1.2	5/8-11 GR 8 HEX NUT, ECOGUARD	12	11-1166
1.3	5/8-11 X 3.25 GR 8 HEX CAP, ECOGUARD	12	11-2232
2	JEMTEC D3 SPINDLE RELIEF VALVE	1	21-1653
3	5/8MJIC X 1/2MORB	1	21-1706
4	O-RING, D3 SPINDLE	1	24-0305
5	LOWER BOLT PLATE, D3	2	31-0893
6	SPINDLE-D3 DIRECT DRIVE SAE C	1	35-0204
7	MOTOR HARDWARE LOCK KIT	1	44-0916
7.1	1/2 X 1.062 GR 8 SAE FLAT WASHER, YELLOW ZINC	4	11-0042
7.2	1/4-20 X 1-1/4 GR 5 HEX CAP, ZINC	4	11-0702
7.3	1/2-13 X 1-1/2 GR 8 HEX CAP SCREW, YELLOW ZINC	4	11-0972
7.4	1/4-20 GR 5 NYLOCK NUT, ZINC	4	11-1022
7.5	MOTOR BOLT LOCK TAB	4	31-0503
7.6	V3LOCK BOTTOM	1	31-0504
7.7	MOTOR LOCKING BASE WITH PRV PROTECTION	1	31-0824
7.8	BOLT LOCKING TAB SPRING	4	36-0013

* NOTE: FLAT SIDE OF WASHERS TOWARDS HARDWARE.
CHAMFER SIDE TOWARDS SPINDLE & DECK.

35-0204-3 | Rev 000

© Diamond Mowers®, LLC

CHAIN CURTAIN ASSEMBLY

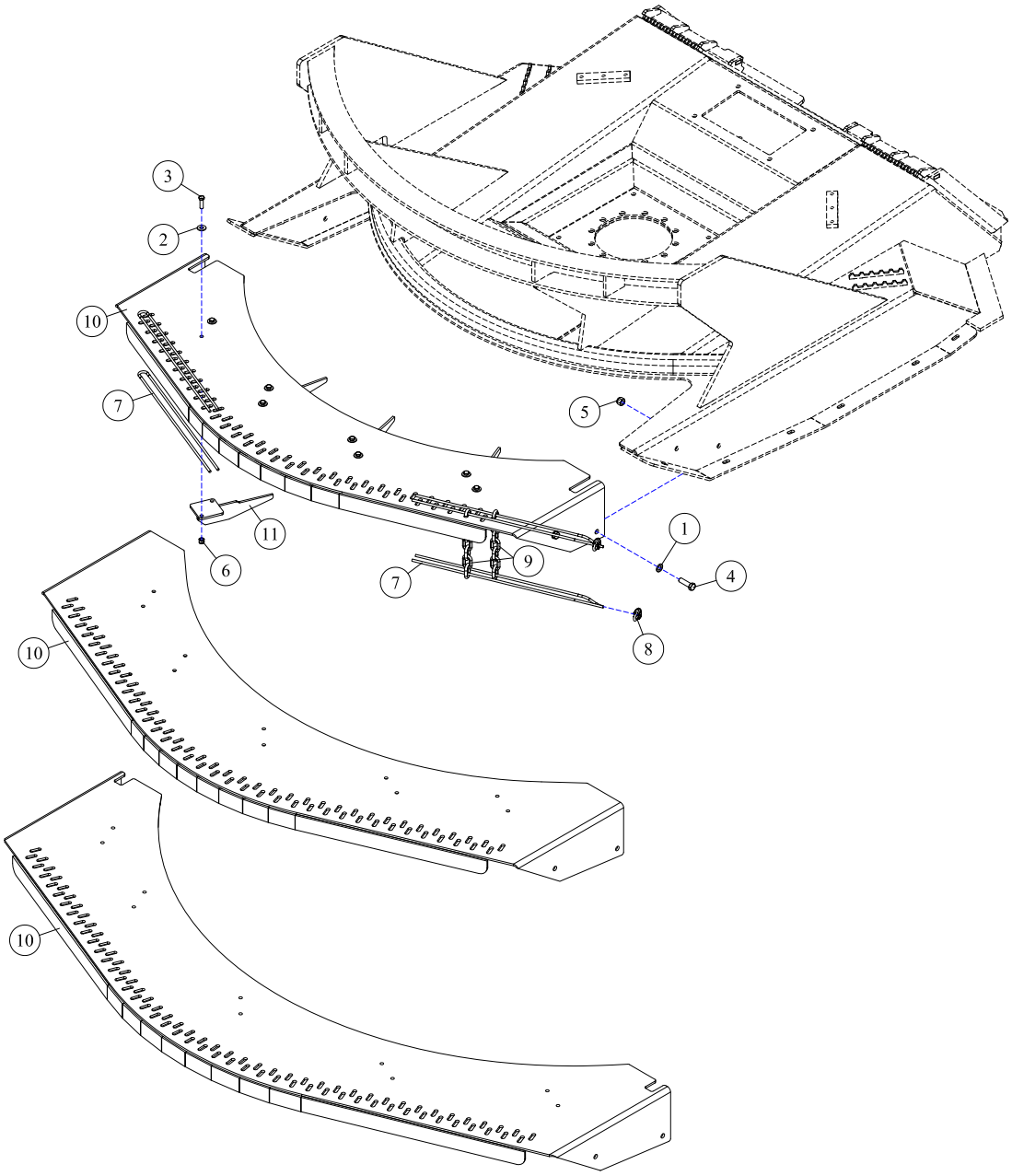

REF#	PARTS DESCRIPTION	REQ	PART #
1	1/2 SAE FLAT WASHER GR8	4	11-0042
2	**3/8 SAE FLAT WASHER GR8**		11-0090
	On 60" DLR	8	
	On 72" DLR	10	
	On 84" DLR	10	
3	**3/8 X 1-1/4 NC HEX CAPSCREW**		11-0533
	On 60" DLR	8	
	On 72" DLR	10	
	On 84" DLR	10	
4	1/2 X 1-3/4 NC HEX CAPSCREW	4	11-0535
5	1/2 NC NYLOCK NUT	4	11-1018
6	**3/8 NC NYLOCK NUT**		11-1024
	On 60" DLR	8	
	On 72" DLR	10	
	On 84" DLR	10	

REF#	PARTS DESCRIPTION	REQ	PART #
7	**1/4 GALVANIZED CABLE (SOLD PER FOOT)**		12-0032
	On 60" DLR	22	
	On 72" DLR	26	
	On 84" DLR	30	
8	1/4 WIRE ROPE CLAMP	2	12-0033
9	**5/16 ZINC CHAIN - 7 LINKS GRADE 30**		12-0036
	On 60" DLR	59	
	On 72" DLR	73	
	On 84" DLR	85	
10	**CHAIN GUARD**		
	D3 DLR CHAIN GUARD 60"	1	41-1636
	D3 DLR CHAIN GUARD 72"	1	41-1635
	D3 DLR CHAIN GUARD 84"	1	41-1637
11	**BOLT ON CHAIN GUARD RIB**		41-1653
	On 60" DLR	4	
	On 72" DLR	5	
	On 84" DLR	5	

DECAL ASSEMBLY

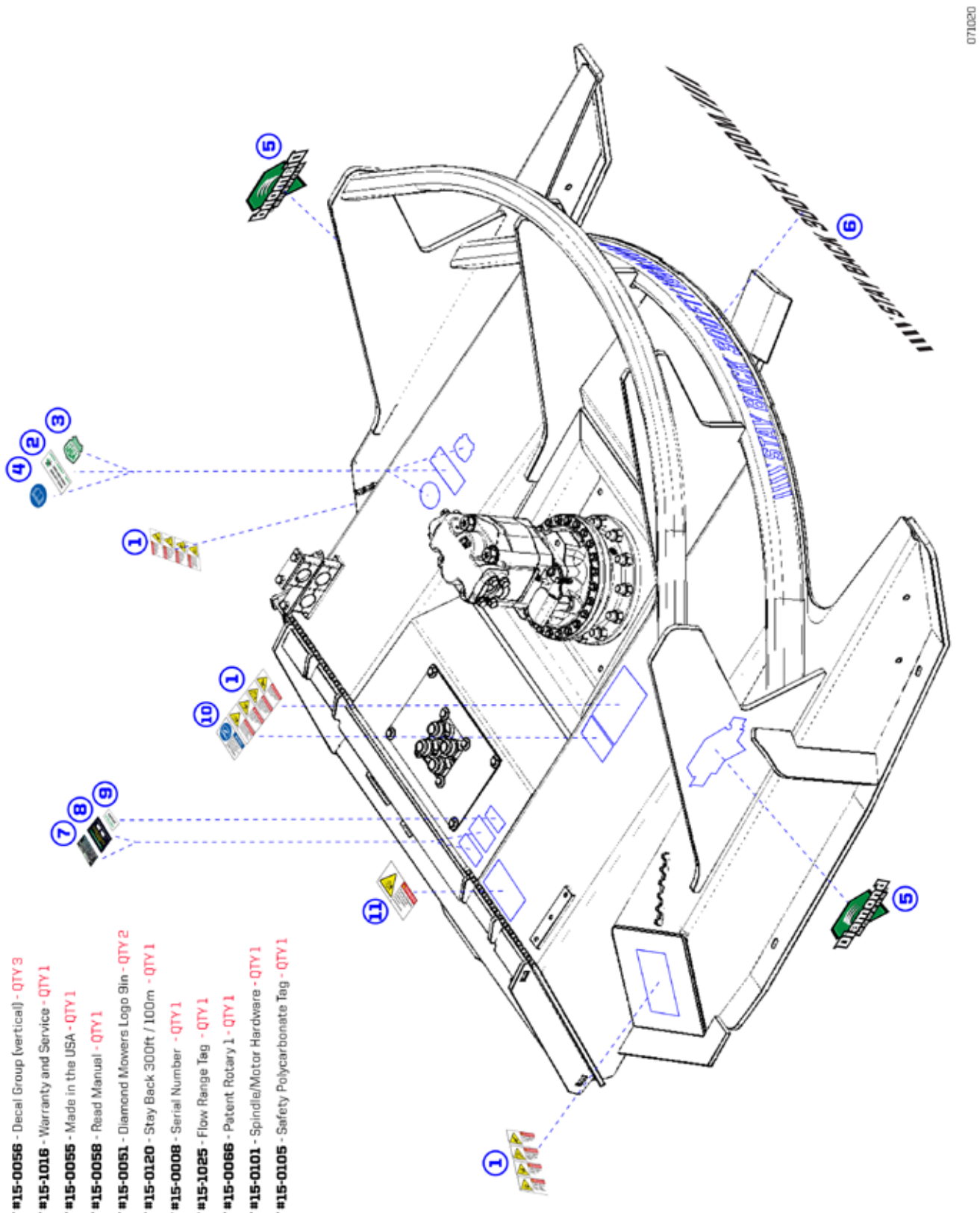

© Diamond Mowers®, LLC

DECK ASSEMBLIES

MOTOR ASSEMBLY - 30-0518

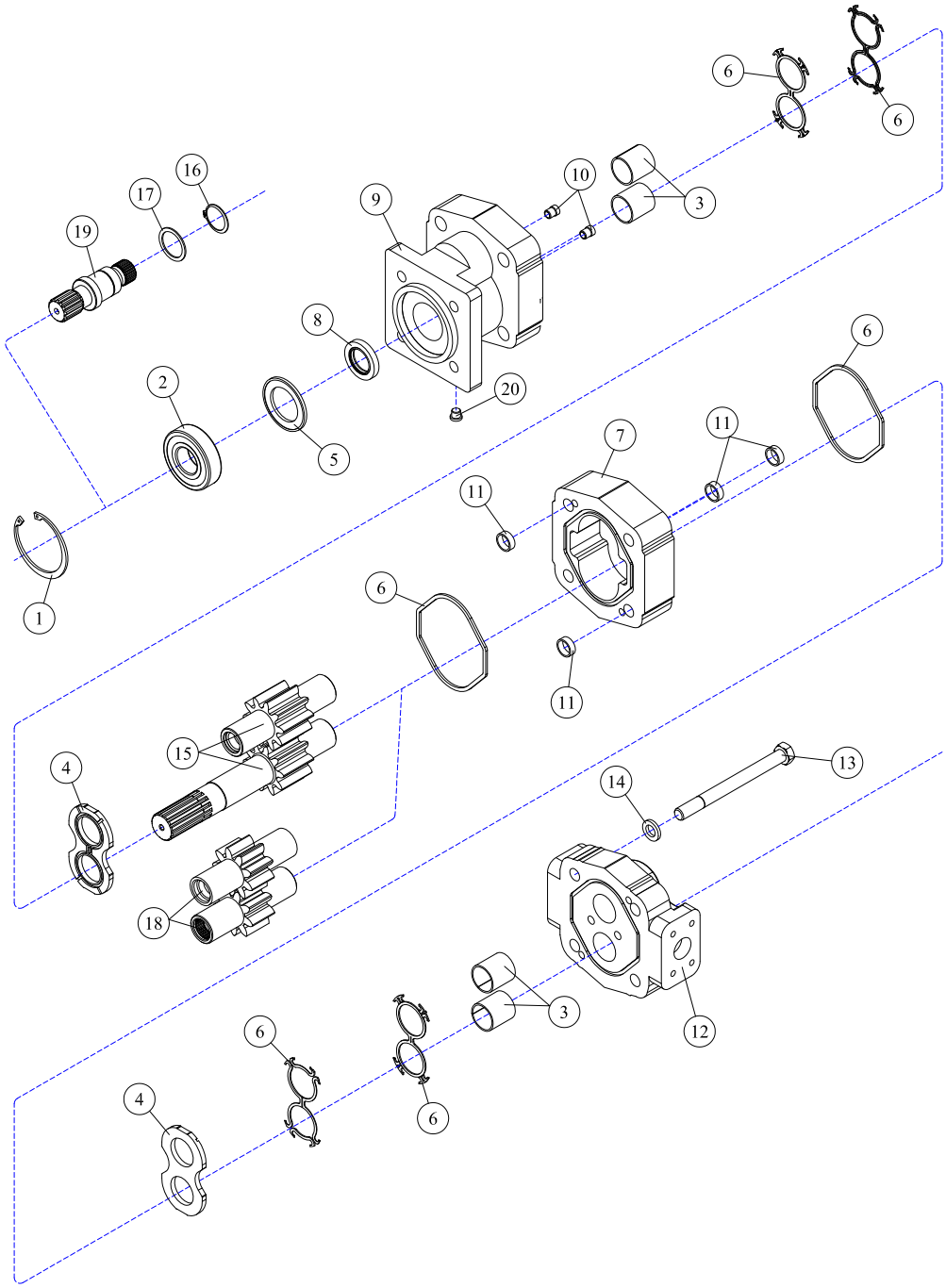

REF#	PARTS DESCRIPTION	REQ	PART #
1	SNAP RING	1	30-1009
2	OUTBOARD BEARING	1	30-1010
3	BUSHING	4	30-1011
4	THRUST PLATE	2	30-1012
5	SEAL RETAINER	1	30-1017
6	M365 SEAL KIT	Avail	30-1021
7	2-1/2" M365 GEAR HOUSING	1	30-1137
8	**SHAFT SEAL**		
	150 PSI (included in M365 seal kit)	1	30-1210
	500 PSI	1	30-1156
9	SHAFT END COVER	1	30-1086
10	CHECK ASSEMBLY	2	30-1087
11	ALIGNMENT BUSHING	4	30-1090

REF#	PARTS DESCRIPTION	REQ	PART #
12	PORT END COVER	1	30-1091
13	STUD	4	30-1334
14	WASHER	4	30-1093
	GEAR SET OPTION A:		
15	2-1/2" GEAR SET	1	30-1170
	GEAR SET OPTION B:		
16	RETAINING RING	1	30-1019
17	WASHER	1	30-1020
18	2-1/2" GEAR SET	1	30-1136
19	CONTINENTAL SHAFT, SPLINED	1	30-1144
20	PLUG	1	30-1096
*	SEAL APPLICATOR TOOL (not shown)	Avail	30-1048

© Diamond Mowers®, LLC

SPINDLE ASSEMBLY - 35-0204

REF#	PARTS DESCRIPTION	REQ	PART #
1	BOLT-HEX HEAD	24	11-1611
2	WASHER-FLAT	24	11-1612
3	RING-RETAINING	1	11-1613
4	NUT-LOCK	1	11-1614
5	SCREW-SKT HD CAP	6	11-1616
6	PLUG (TO COVER) (MAGNETIC)	1	35-0200
7	PLUG (TO COVER) (NON-MAGNETIC)	1	35-0202
8	PIPE PLUG (TO HUB) (MAGNETIC)	2	21-1611
9	PLATE-KEEPER	1	35-0098
10	WASHER-THRUST (BOTTOM)	1	35-0099
11	HUB	1	35-0100
12	GUARD	1	35-0102
13	SHAFT-OUTPUT	1	35-0103
14	**COVER**		
	C COVER (STANDARD)	1	35-0199
	D COVER (OPTIONAL)	1	35-0109
	SEAL KIT		**33-0078**
15	WASHER-LOCK	1	
16	SEAL-OIL	1	
	SEALANT		
	BEARING AND SEAL KIT		**33-0079**
17	BEARING-CONE (TOP)	1	
18	BEARING-CUP (TOP)	1	
19	BEARING-CONE (BOTTOM)	1	
20	BEARING-CUP (BOTTOM)	1	
15	WASHER-LOCK	1	
16	OIL SEAL	1	
	SEALANT	1	
	D3 SPINDLE REPLACEMENT INSERT KIT		**33-0080**
21	WASHER-THRUST (TOP)	1	
22	COUPLING	1	
	SEALANT		
23	O-RING, D3 SPINDLE	1	24-0305

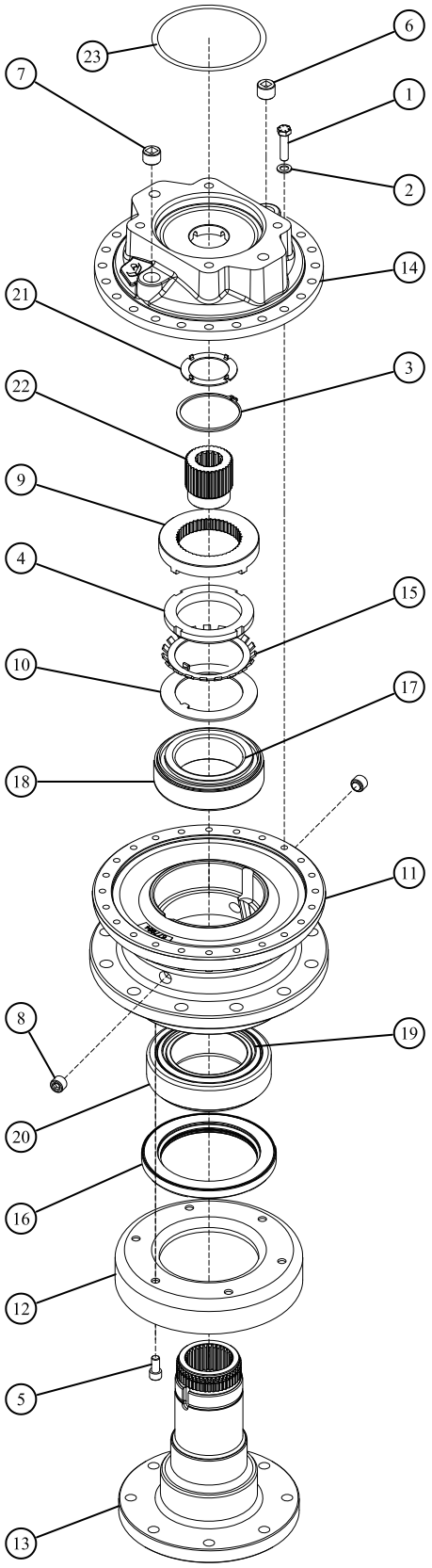

Assy: 35-0204

APPENDIX

O-RINGS - S.A.E.

ORING (AS568) BOSS FITTINGS (KIT PART# 33-0122)

SAE SIZES

STANDARD ORING PART #	HYDRAULIC SIZE	ORING ID SAE (IN)	ORING WIDTH SAE (IN)	ORING MATERIAL
902	-2	0.24	0.06	90-durometer Nitrile
903	-3	0.30	0.06	90-durometer Nitrile
904	-4	0.35	0.07	90-durometer Nitrile
905	-5	0.41	0.07	90-durometer Nitrile
906	-6	0.47	0.08	90-durometer Nitrile
908	-8	0.64	0.09	90-durometer Nitrile
910	-10	0.76	0.1	90-durometer Nitrile
912	-12	0.92	0.12	90-durometer Nitrile
914	-14	1.05	0.12	90-durometer Nitrile
916	-16	1.17	0.12	90-durometer Nitrile
920	-20	1.48	0.12	90-durometer Nitrile
924	-24	1.72	0.12	90-durometer Nitrile
932	-32	2.34	0.12	90-durometer Nitrile

ORING (AS568) FLAT SEAL FITTINGS (KIT PART# 33-0123)

SAE SIZES & METRIC SIZES

STANDARD ORING PART #	HYDRAULIC SIZE	END SIZE SAE (IN)	END SIZE METRIC (MM)	ORING ID SAE (IN)	ORING ID METRIC (MM)	ORING WIDTH SAE (IN)	ORING WIDTH METRIC (MM)	ORING MATERIAL
011	-4	1/4	6	0.30	7.70	0.07	1.78	90-durometer Nitrile
012	-6	3/8	8, 10	0.36	9.30	0.07	1.78	90-durometer Nitrile
014	-8	1/2	12	0.49	12.40	0.07	1.78	90-durometer Nitrile
016	-10	5/8	14, 15, 16	0.61	15.60	0.07	1.78	90-durometer Nitrile
018	-12	3/4	18, 20	0.74	18.80	0.07	1.78	90-durometer Nitrile
020	-14	7/8	22	0.86	21.80	0.07	1.78	90-durometer Nitrile
021	-16	1	25	0.93	23.50	0.07	1.78	90-durometer Nitrile
025	-20	1 1/4	28, 30, 32	1.18	29.90	0.07	1.78	90-durometer Nitrile
029	-24	1 1/2	35, 38	1.49	37.80	0.07	1.78	90-durometer Nitrile
135	-32	2	50	1.93	490.00	0.10	2.54	90-durometer Nitrile

© Diamond Mowers®, LLC

APPENDIX

S.A.E. TORQUE SPECIFICATIONS

Nominal Dia. (in.)	threads per inch	Tensile Stress Area (sq. in.)	ASTM A307 Grade A				SAE J429 Grade 5				SAE J429 Grade 8				FNL Grade 9			
			Clamp Load (Lbs.)	Tightening Torque K = 0.15	Tightening Torque K = 0.17	Tightening Torque K = 0.20	Clamp Load (Lbs.)	Tightening Torque K = 0.15	Tightening Torque K = 0.17	Tightening Torque K = 0.20	Clamp Load (Lbs.)	Tightening Torque K = 0.15	Tightening Torque K = 0.17	Tightening Torque K = 0.20	Clamp Load (Lbs.)	Tightening Torque K = 0.15	Tightening Torque K = 0.17	Tightening Torque K = 0.20
Unified Coarse Thread Series																		
1/4	20	0.0318	859	32 in-lbs	37 in-lbs	43 in-lbs	2029	76 in-lbs	86 in-lbs	101 in-lbs	2864	107 in-lbs	122 in-lbs	143 in-lbs	3357	126 in-lbs	143 in-lbs	168 in-lbs
5/16	18	0.0524	1416	66	75	88	3342	157	178	209	4719	221	251	295	5531	259	294	346
3/8	16	0.0775	2092	10 ft-lbs	11 ft-lbs	13 ft-lbs	4940	23 ft-lbs	26 ft-lbs	31 ft-lbs	6974	33 ft-lbs	37 ft-lbs	44 ft-lbs	8174	38 ft-lbs	43 ft-lbs	51 ft-lbs
7/16	14	0.1063	2870	16	18	21	6777	37	42	49	9568	52	59	70	11214	61	70	82
1/2	13	0.1419	3831	24	27	32	9046	57	64	75	12771	80	90	106	14969	94	106	125
9/16	12	0.1819	4912	35	39	46	11599	82	92	109	16375	115	130	154	19193	135	153	180
5/8	11	0.2260	6102	48	54	64	14408	113	128	150	20340	159	180	212	23840	186	211	248
3/4	10	0.3345	9030	85	96	113	21322	200	227	267	30101	282	320	376	35281	331	375	441
7/8	9	0.4617	12467	136	155	182	29436	322	365	429	41556	455	515	606	48707	533	604	710
1	8	0.6057	16355	204	232	273	38616	483	547	644	54517	681	772	909	63899	799	905	1065
1 1/4	7	0.9691	26166	409	463	545	53786	840	952	1121	87220	1363	1545	1817	102229	1597	1810	2130
1 1/2	6	1.4053	37942	711	806	949	77991	1462	1657	1950	126473	2371	2688	3162	148237	2779	3150	3706
Fine Thread Series																		
1/4	28	0.0364	982	37 in-lbs	42 in-lbs	49 in-lbs	2319	87 in-lbs	99 in-lbs	116 in-lbs	3274	123 in-lbs	139 in-lbs	164 in-lbs	3837	144 in-lbs	163 in-lbs	192 in-lbs
5/16	24	0.0581	1568	73	83	98	3702	174	197	231	5226	245	278	327	6125	287	325	383
3/8	24	0.0878	2371	11 ft-lbs	13 ft-lbs	15 ft-lbs	5599	26 ft-lbs	30 ft-lbs	35 ft-lbs	7905	37 ft-lbs	42 ft-lbs	49 ft-lbs	9265	43 ft-lbs	49 ft-lbs	58 ft-lbs
7/16	20	0.1187	3205	18	20	23	7568	41	47	55	10684	58	66	78	12523	68	78	91
1/2	20	0.1600	4319	27	31	36	10197	64	72	85	14396	90	102	120	16873	105	120	141
9/16	18	0.2030	5480	39	44	51	12940	91	103	121	18268	128	146	171	21412	151	171	201
5/8	18	0.2560	6911	54	61	72	16317	127	144	170	23036	180	204	240	27000	211	239	281
3/4	16	0.3730	10070	94	107	126	23776	223	253	297	33566	315	357	420	39343	369	418	492
7/8	14	0.5095	13756	150	171	201	32479	355	403	474	45853	502	568	669	53743	588	666	784
1	14	0.6799	18357	229	260	306	43343	542	614	722	61190	765	867	1020	71720	896	1016	1195
1 1/4	12	1.0729	28970	453	513	604	59548	930	1055	1241	96565	1509	1710	2012	113182	1768	2004	2358
1 1/2	12	1.5810	42688	800	907	1067	87747	1645	1865	2194	142292	2668	3024	3557	166778	3127	3544	4169

The torque values can only be achieved if nut (or tapped hole) has a proof load greater than or equal to the bolt's minimum ultimate tensile strength.
Clamp load calculated as 75% of the proof load when specified by the standard. ASTM A307 utilized 75% of 36,000 PSI.
Torque values for 1/4 and 5/16-in series are in inch-pounds. All other torque values are in foot-pounds.
Torque values calculated from formula T=KDF, where

K = 0.15 for "lubricated" conditions
K = 0.17 for zinc plated and dry conditions; we have also found various forms of customer applied thread lockers to have a similar K value.
K = 0.20 for plain and dry conditions
D = Nominal Diameter
F = Clamp Load

Note: When using Zinc Plated (lubricated with wax) Top Lock Nuts, the K value can vary between 0.12-0.16

METRIC TORQUE SPECIFICATIONS

Nominal Dia. (mm)	Pitch	Class 4.6				Class 8.8				Class 10.9				Class 12.9			
		Clamp Load (lbs)	Tightening Torque Lubricated (ft-lbs)	Tightening Torque Zinc Plated (ft-lbs)	Tightening Torque Plain&Dry (ft-lbs)	Clamp Load (lbs)	Tightening Torque Lubricated (ft-lbs)	Tightening Torque Zinc Plated (ft-lbs)	Tightening Torque Plain&Dry (ft-lbs)	Clamp Load (lbs)	Tightening Torque Lubricated (ft-lbs)	Tightening Torque Zinc Plated (ft-lbs)	Tightening Torque Plain&Dry (ft-lbs)	Clamp Load (lbs)	Tightening Torque Lubricated (ft-lbs)	Tightening Torque As-Received (ft-lbs)	Tightening Torque Plain&Dry (ft-lbs)
4	0.7	333	0.7	0.7	0.9	858	1.7	1.9	2.3	1228	2.4	2.7	3.2	1436	2.8	3.2	3.8
5	0.8	538	1.3	1.5	1.8	1387	3.4	3.9	4.5	1985	4.9	5.5	6.5	2319	5.7	6.5	7.6
6	1	763	2.3	2.6	3.0	1968	5.8	6.6	7.7	2816	8.3	9.4	11.1	3291	9.7	11.0	13.0
7	1	1095	3.8	4.3	5.0	2822	9.7	11.0	13.0	4039	13.9	15.8	18.5	4720	16.3	18.4	21.7
8	1.25	1389	5.5	6.2	7.3	3580	14.1	16.0	18.8	5123	20.2	22.9	26.9	5987	23.6	26.7	31.4
10	1.5	2200	10.8	12.3	14.4	5671	27.9	31.6	37.2	8115	39.9	45.2	53.2	9484	46.7	52.9	62.2
12	1.75	3197	18.9	21.4	25.2	8240	48.7	55.1	64.9	11792	69.6	78.9	92.8	13781	81.4	92.2	108.5
14	2	4379	30.2	34.2	40.2	11289	77.8	88.1	103.7	16154	111.3	126.1	148.4	18879	130.0	147.4	173.4
16	2	5943	47	53	62	15320	121	137	161	21924	173	196	230	25622	202	229	269
18	2.5	7301	65	73	86	18822	167	189	222	26934	239	270	318	31477	279	316	372
20	2.5	9286	91	104	122	23938	236	267	314	34256	337	382	449	40034	394	446	525
22	2.5	11509	125	141	166	29669	321	364	428	42457	460	521	613	49619	537	609	716
24	3	13372	158	179	211	34471	407	461	543	49329	582	660	777	57649	681	771	908
27	3	17428	232	262	309	44924	597	676	796	64288	854	968	1139	75132	998	1131	1331
30	3.5	21266	314	356	419	54819	809	917	1079	78448	1158	1312	1544	91680	1353	1534	1804
33	3.5	26310	427	484	570	67821	1101	1248	1468	97055	1576	1786	2101	113425	1842	2087	2455
36	4	30982	549	622	732	79866	1415	1603	1886	114291	2024	2294	2699	133569	2366	2681	3154

The torque values can only be achieved if nut (or tapped hole) has a proof load greater than or equal to the bolt's minimum ultimate tensile strength.
Clamp loads estimated as 75% of proof load for specified bolts.
Torque values listed in foot-pounds .
Torque values calculated from formula T=KDF where; K=0.15 for "lubricated" condition, K=0.17 for zinc plated and dry condition (or as-received for the 12.9), K=0.20 for plain and dry condition

© Diamond Mowers®, LLC

(This Page Is Intentionally Left Blank)

DEMAND
BRILLIANCE

DIAMONDMOWERS.COM

210826