PARTS BOOK

SKID-STEER MILLER STUMP GRINDER

26" (661MM) WHEEL

DOC #15-1387

WARRANTY + SERVICE 888.960.0364
PARTS 888.960.0361

Diamond MOWERS™

DIAMONDMOWERS.COM

TABLE OF CONTENTS

STUMP GRINDER HEADS
DECK ASSEMBLY - 26"(661MM) 4
BOLT KIT - DECK ASSEMBLY 6
MANIFOLD - DECK ASSEMBLY 7
CUTTING WHEEL - 26"(661MM) 9
DECAL ASSEMBLY 10

DECK ASSEMBLIES
PISTON MOTOR ASSEMBLY 12

APPENDIX
O-RINGS - S.A.E. 15
S.A.E. TORQUE SPECIFICATIONS 16
METRIC TORQUE SPECIFICATIONS 16

STUMP GRINDER HEADS

STUMP GRINDER HEAD

DECK ASSEMBLY - 26"(661MM)

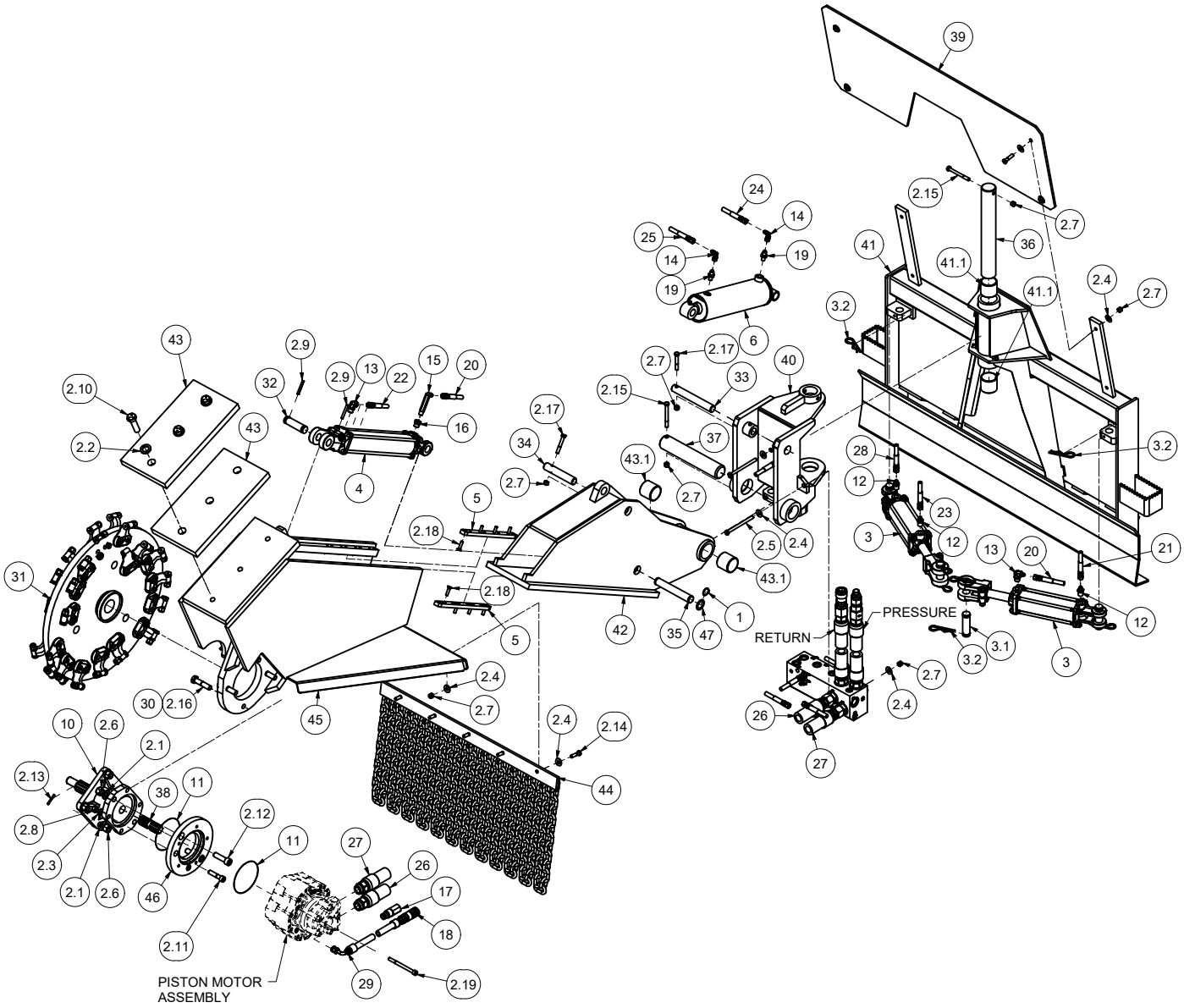

49-7040	Rev A

© Diamond Mowers®, LLC

STUMP GRINDER HEAD

DECK ASSEMBLY - 26"(661MM)

REF#	PARTS DESCRIPTION	REQ	PART#	TORQUE (ft-lbs)
1	SNAP RING, 1IN EXTERNAL	2	11-2174	
2	BOLT KIT	1	11-3565	
2.1	5/8 X 1.312 THRU-HARDENED SAE FLAT WASHER, YELLOW ZINC	10	11-0012	
2.2	3/4 SAE GR 8 FLAT WASHER, YELLOW	3	11-0039	
2.3	1/2 SAE FLAT WASHER GR 8, YELLOW ZINC	2	11-0042	
2.4	3/8 THRU-HARDENED FLAT WASHER, YELLOW ZINC	22	11-0092	
2.5	3/8-16 X 5 GR 5 HEX CAP, ZINC	2	11-0582	31
2.6	5/8"-11 GRADE C STEEL TOP LOCK	6	11-1046	64
2.7	3/8" NC NYLOCK NUT, GR 8	15	11-1075	
2.8	1/2-13 TOP LOCK NUT GR C, ZINC	2	11-1641	106
2.9	ROLL PIN, 1/4" X 2"	2	11-2005	
2.10	3/4-10 X 2-3/4 GR 8 HEX CAP SCREW, YELLOW ZINC	3	11-2123	376
2.11	5/8"-11 X 2-1/4" SOCKET CAP SCREW, PLAIN	2	11-2167	238**
2.12	1/2-13 X 2-1/4 ASTM A574 SOCKET CAP, BLACK OXIDE	2	11-2168	124**
2.13	M5 X 40MM SPRING PIN, PLAIN	1	11-2169	
2.14	3/8"-16 X 1-1/2" GR 8 HEX CAP, YELLOW ZINC	9	11-2178	44
2.15	3/8"-16 X 3-3/4" GR 8 HEX CAP, YELLOW ZINC	2	11-2180	44
2.16	5/8"-11 X 2-3/4" GR 8 HEX CAP, YELLOW ZINC	4	11-2183	212**
2.17	3/8"-16 X 2-1/2" GR 8 HEX CAP, YELLOW ZINC	2	11-2181	44
2.18	5/16"-18 X 1-1/4" FLAT SOCKET CAP SCREW, BLACK	16	11-2185	29
2.19	M10-1.5 X 120MM SOCKET CAP SCREW, GR 12.9	5	11-2198	62**
3	CYLINDER - TIE ROD 2.50 X 6.00	2	14-0049	
3.1	CLEVIS PIN, 1" X 3-1/2"	2	27-0004	
3.2	3/16 R-CLIP	4	11-2001	
4	CYLINDER - TIE ROD 2.50 X 12.0	1	14-0050	
5	BLOCK SLIDE, UHMW, FLOATING	4	14-0052	
6	CYLINDER - WELDED 3.50 X 8.00	1	14-0054	
*7	DECAL KIT, STUMP GRINDER SKID STEER MILLER MOUNT	1	15-5131	
*8	HARNESS, 6-FUNCTION, ATTACHMENT SIDE	1	16-0262	
*9	CONTROLLER, MULTI-FUNCTION, HANDHELD	1	16-0264	
10	BEARING HOUSING - DMG/DSG	1	19-0170	
11	O-RING, STUMP GRINDER	2	21-1326	
12	1/4" MJIC X 3/8" MP, FITTING	3	21-1332	
13	1/4" MJIC X 3/8" MP-90DEG, FITTING	2	21-1333	
14	1/4" MJIC X 1/4" FJIC-90DEG, FITTING	3	21-1337	
15	1/4" MJIC X 1/4" MP-90DEG, FITTING X-LONG	1	21-1339	
16	3/8" MP X 1/4" FP, BUSHING	1	21-1340	
17	3/8" MALE QUICK COUPLER, FLAT FACE, NO SPILL	1	21-1561	
18	3/8" FEMALE QUICK COUPLER, FLAT FACE, NO SPILL	1	21-1562	
19	1/4" MJIC X 1/2" MP, FITTING	2	21-1693	
20	HOSE 1/4" X 21" (1/4"FJIC X 1/4"FJIC)	2	21-4653	
21	HOSE 1/4" X 28" (1/4"FJIC X 1/4"FJIC)	1	21-4654	
22	HOSE 1/4" X 36" (1/4"FJIC X 1/4"FJIC)	1	21-4655	
23	HOSE 1/4" X 26" (1/4"FJIC X 1/4"FJIC-90DEG)	1	21-4656	
24	HOSE 1/4" X 21" (1/4"FJIC X 1/4"FJIC-45DEG)	1	21-4657	
25	HOSE 1/4" X 25" (1/4"FJIC X 1/4"FJIC-45DEG)	1	21-4658	
26	HOSE 1" X 68" (1"FJIC X 1"MORB) 3000 PSI	1	21-4660	
27	HOSE 1" X 68" (1"FJIC X 1"MORB) 4000 PSI	1	21-4662	
28	HOSE 1/4" X 30" (1/4"FJIC X 1/4"FJIC)	1	21-4687	
29	HOSE 3/8" X 143" (3/8"FJIC-90DEG X 1/2"MP)	1	21-4720	
30	LOCTITE 243, .5 ML (BLUE)	1	24-0207	
31	WHEEL ASSEMBLY - DSG/DMG 26"	1	24-0370	
32	CLEVIS PIN, 1" X 3-1/2"	1	27-0004	
33	PIN, LIFT, BASE END	1	27-0079	
34	PIN, LIFT, ROD END	1	27-0080	
35	PIN, TELESCOPIC BASE	1	27-0081	
36	PIN, CENTER ROTATION	1	27-0082	
37	PIN, CENTER TILT	1	27-0084	
38	STUB SHAFT, A3 SPLINE, FOR HIGH PRESS HC05 MOTOR	1	35-0197	
39	SAFETY GLASS - DMG	1	41-1781	
40	SWIVEL-STMP GRNDR DMG	1	41-1782	
41	SKID ATTACH BRKT-STMP GRNDR DMG	1	41-1784	
41.1	BUSHING-GARLOCK 2.25 X 2 X 2	2	10-0116	
42	BEAM-STMP GRNDR DMG	1	41-1786	
42.1	BUSHING-GARLOCK 2.25 X 2 X 2	2	10-0116	
43	COUNTER WEIGHT PLATE	2	41-1803	
44	BRKT-CHAIN DMG/TMG	1	41-1819	
45	SLIDER - DMG YELLOW	1	41-1968	
46	ADAPTER - MOTOR DMG/DSG	1	90-7079	
47	WASHER, MACHINED	2	90-7085	

* NOT SHOWN

** CRITICAL TORQUE VALUES **MUST** BE FOLLOWED.

49-7040	Rev A

BOLT KIT - DECK ASSEMBLY

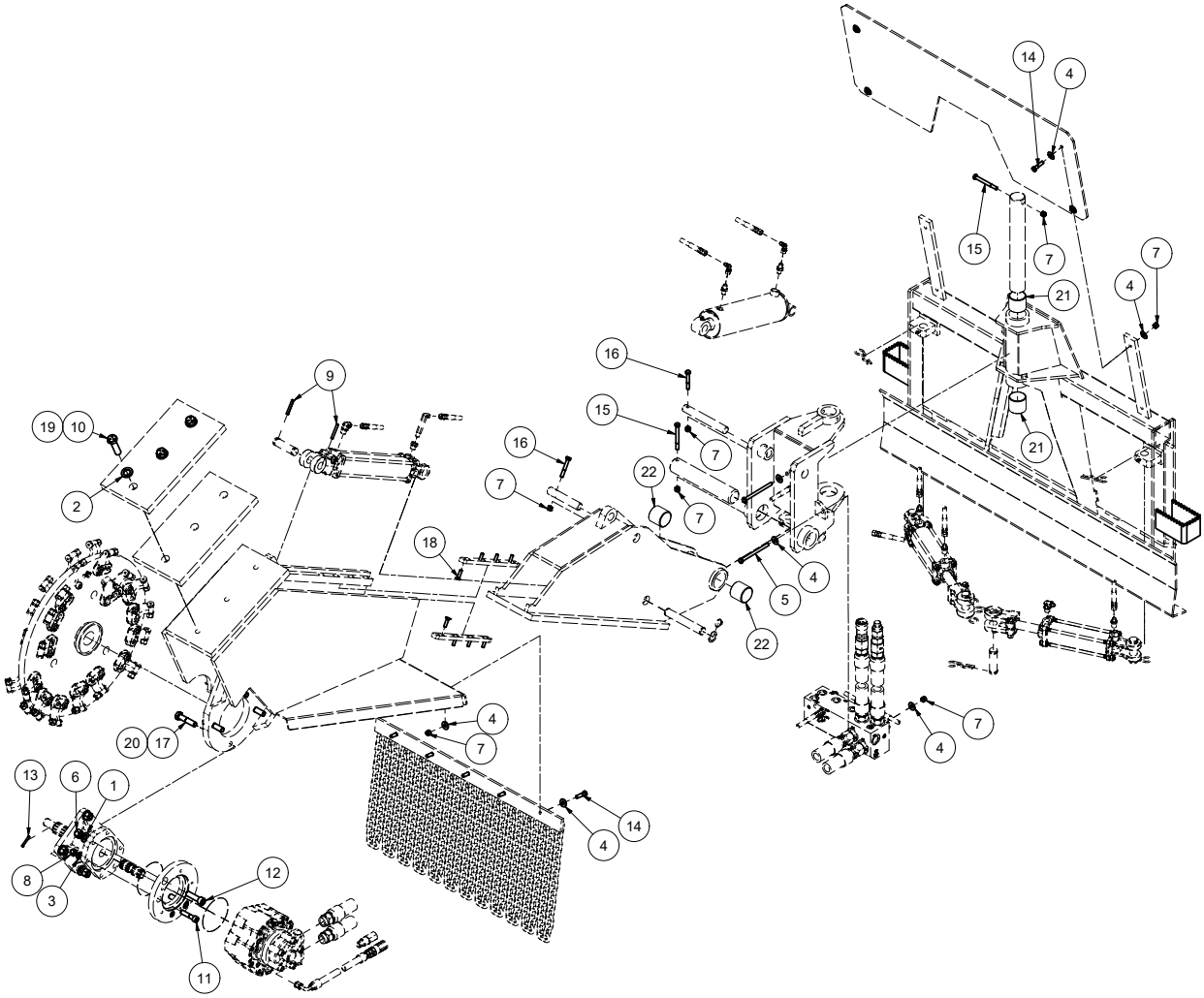

REF#	PARTS DESCRIPTION	REQ	PART#	TORQUE (ft-lbs)	TORQUE (Nm)
	BOLT KIT	1	11-3565		
1	5/8 X 1.312 THRU-HARDENED SAE FLAT WASHER, YELLOW ZINC	10	11-0012		
2	3/4 SAE GR 8 FLAT WASHER, YELLOW	3	11-0039		
3	1/2 X 1.062 GR 8 SAE FLAT WASHER, YELLOW ZINC	2	11-0042		
4	3/8 THRU-HARDENED FLAT WASHER, YELLOW ZINC	22	11-0092		
5	3/8-16 X 5 GR 5 HEX CAP, ZINC	2	11-0582	31	42
6	5/8"-11 GRADE C STEEL TOP LOCK	6	11-1046		
7	3/8" NC NYLOCK NUT, GR 8	15	11-1075		
8	1/2-13 TOP LOCK NUT GR C, ZINC	2	11-1641		
9	ROLL PIN, 1/4" X 2"	2	11-2005		
10	3/4-10 X 2-3/4 GR 8 HEX CAP SCREW, YELLOW ZINC	3	11-2123	376	510
11	5/8-11 X 2-1/4 ASTM A574 SOCKET CAP, BLACK OXIDE	2	11-2167	238	323
12	1/2-13 X 2-1/4 ASTM A574 SOCKET CAP, BLACK OXIDE	2	11-2168	124	168
13	M5 X 40MM SPRING PIN, PLAIN	1	11-2169		
14	3/8"-16 X 1-1/2" GR 8 HEX CAP, YELLOW ZINC	9	11-2178	44	60
15	3/8"-16 X 3-3/4" GR 8 HEX CAP, YELLOW ZINC	2	11-2180	44	60
16	3/8"-16 X 2-1/2" GR 8 HEX CAP, YELLOW ZINC	2	11-2181	44	60
17	5/8-11 X 2-3/4 GR 8 HEX CAP, YELLOW ZINC	4	11-2183	212	287
18	5/16"-18 X 1-1/4" FLAT SOCKET CAP SCREW, BLACK	16	11-2185	29	39
19	LOCTITE RED 262	1	24-0193		
20	LOCTITE BLUE 243	1	24-0207		
21	SKID ATTACH BRKT-STMP GRNDR DMG	1	41-1784		
22	BEAM-STMP GRNDR DMG	1	41-1786		

11-3565	Rev A

© Diamond Mowers®, LLC

STUMP GRINDER HEAD

MANIFOLD - DECK ASSEMBLY

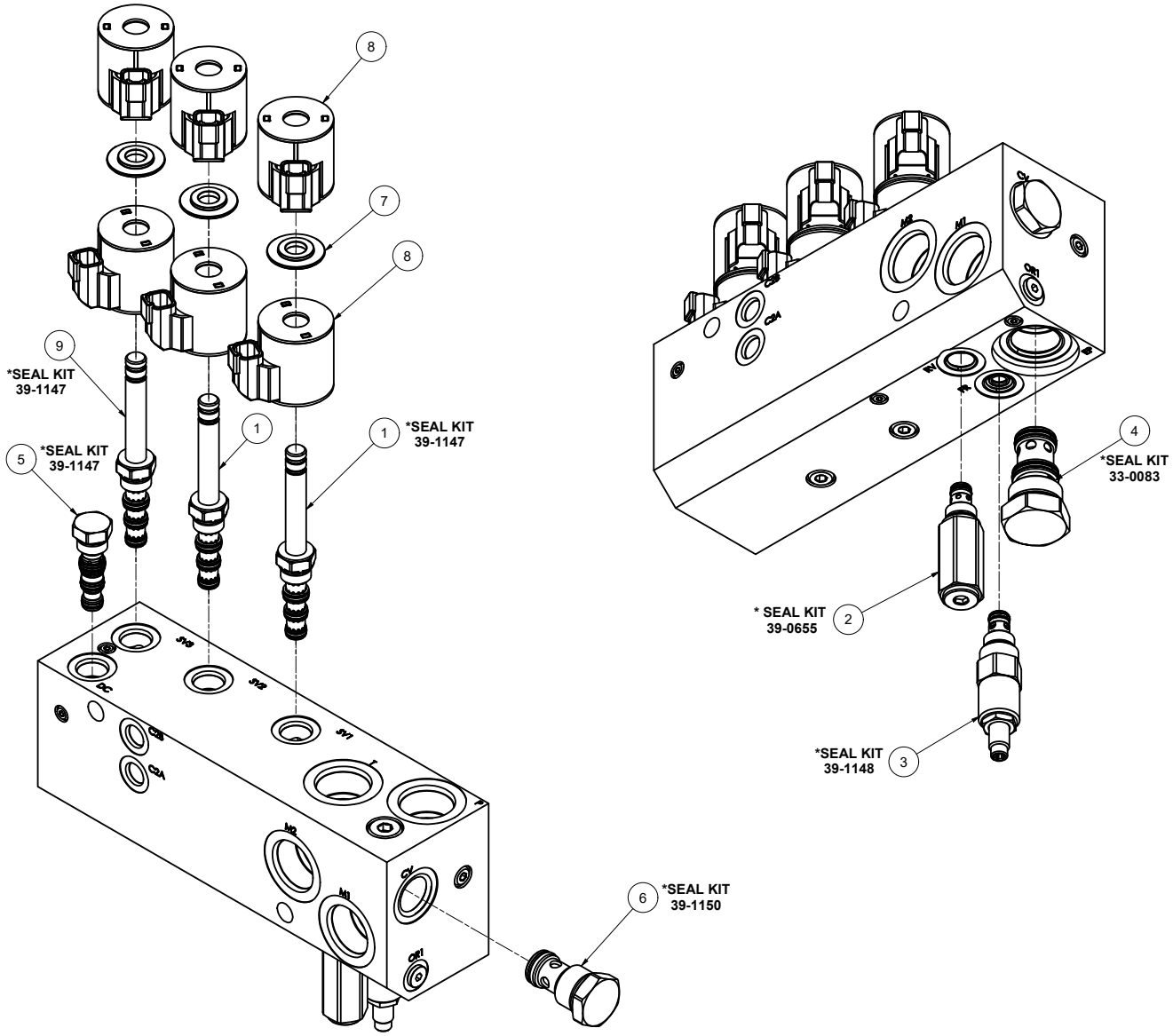

REF#	PARTS DESCRIPTION	REQ	PART#
1	SPOOL-TYPE, 4-WAY, 3-POSITION, TANDEM CENTER	2	39-1138
2	RELIEF, DIFFERENTIAL AREA, POPPET-TYPE VALVE	1	39-1139
3	RELIEF, DIRECT-ACTING, POPPET-TYPE VALVE	1	39-1140
4	PILOTED SPOOL-TYPE LOGIC ELEMENT	1	39-1141
5	PILOT-OPERATED CHECK VALVE	1	39-1142
6	CHECK VALVE	1	39-1143
7	COIL SPACER	3	39-1144
8	SOLENOID VALVE COIL	6	39-1145
9	SPOOL-TYPE, 4-WAY, 3-POSITION, OPEN CENTER	1	39-1146

39-1127	Rev A

MANIFOLD - DECK ASSEMBLY

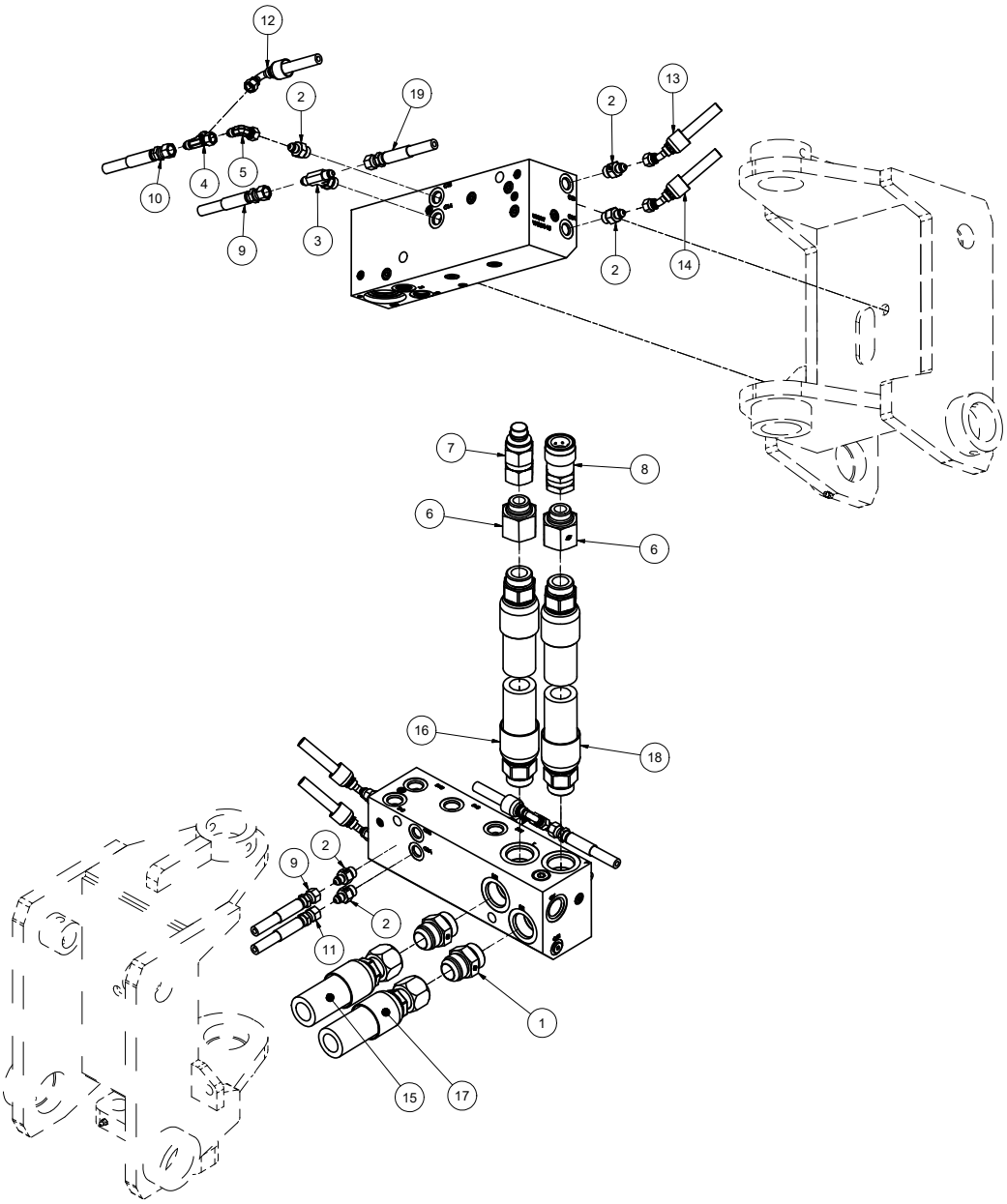

REF#	PARTS DESCRIPTION	REQ	PART#
1	1MOR X 1MJIC, ADAPTER	2	21-1005
2	1/4"MJIC X 3/8"MORB, FITTING	5	21-1334
3	1/4"MJ X .1/4"MJ X 3/8"MORB, TEE	1	21-1335
4	1/4"MJ X 1/4"FJ X 1/4"MJ, TEE	1	21-1336
5	1/4" MJIC X 1/4" FJIC-90DEG, FITTING	1	21-1337
6	3/4"MORB X 1"FORB, FITTING	2	21-1344
7	1/2" MALE QUICK COUPLER X 3/4" SAE, FLAT FACE, NO SPILL	1	21-1559
8	1/2" FEMALE QUICK COUPLER X 3/4" SAE, FLAT FACE, NO SPILL	1	21-1560
9	HOSE 1/4" X 21" (1/4"FJIC X 1/4"FJIC)	2	21-4653
10	HOSE 1/4" X 28" (1/4"FJIC X 1/4"FJIC)	1	21-4654
11	HOSE 1/4" X 36" (1/4"FJIC X 1/4"FJIC)	1	21-4655
12	HOSE 1/4" X 26" (1/4"FJIC X 1/4"FJIC-90DEG)	1	21-4656
13	HOSE 1/4" X 21" (1/4"FJIC X 1/4"FJIC-45DEG)	1	21-4657
14	HOSE 1/4" X 25" (1/4"FJIC X 1/4"FJIC-45DEG)	1	21-4658
15	HOSE 1" X 68" (1"FJIC X 1"MORB) 3000 PSI	1	21-4660
16	HOSE 1" X 68" (1"MORB X 1"MORB) 3000 PSI	1	21-4661
17	HOSE 1" X 68" (1"FJIC X 1"MORB) 4000 PSI	1	21-4662
18	HOSE 1" X 68" (1"MORB X 1"MORB) 4000 PSI	1	21-4663
19	HOSE 1/4" X 30" (1/4"FJIC X 1/4"FJIC)	1	21-4687

39-1127	Rev A

© Diamond Mowers®, LLC

STUMP GRINDER HEAD

CUTTING WHEEL - 26"(661MM)

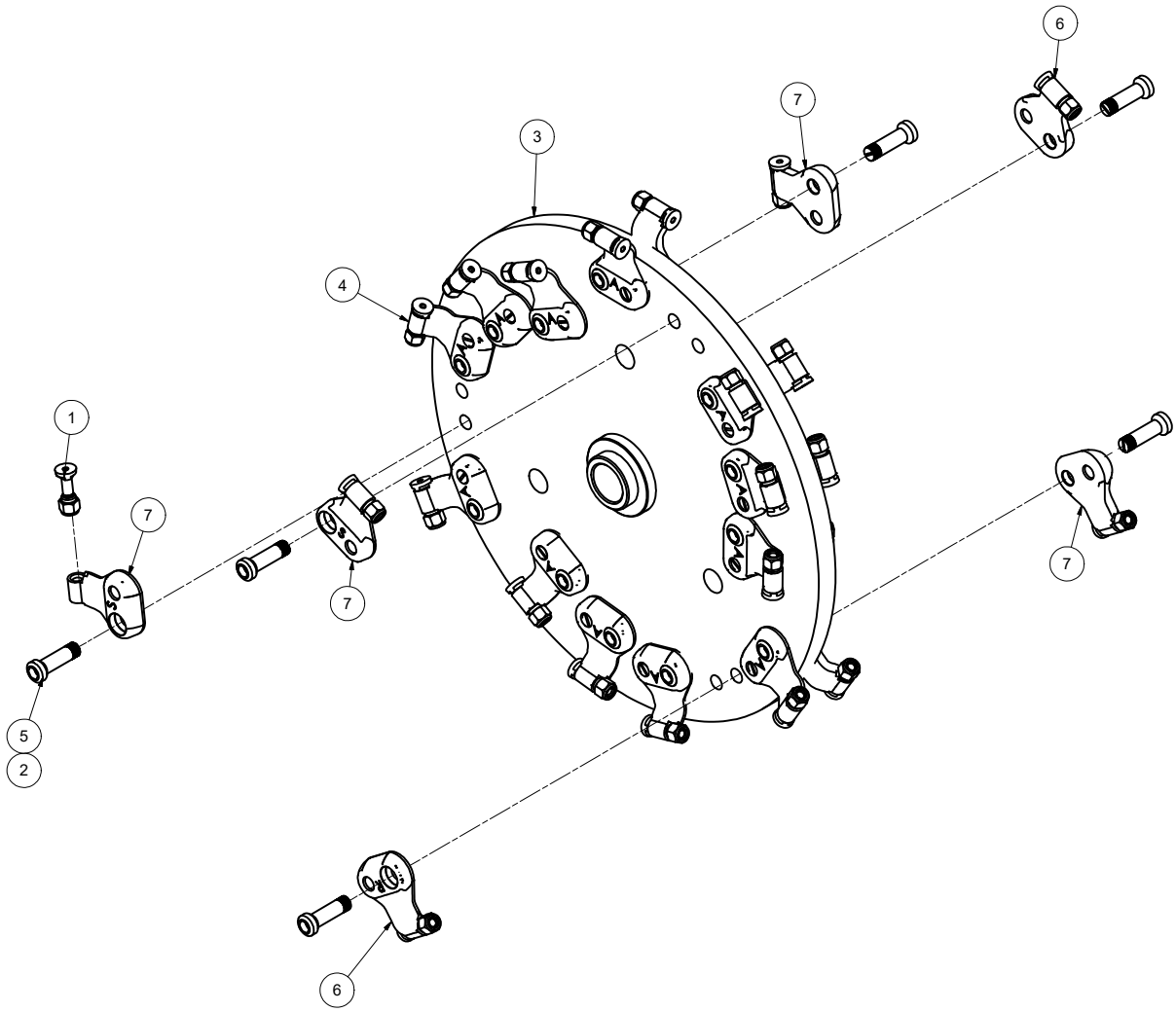

REF#	PARTS DESCRIPTION	REQ	PART#	TORQUE (ft-lbs)	TORQUE (Nm)
1	TOOTH, WEARSHARP	30	22-0034	35	47
2	LOCTITE BLUE 243	1	24-0207		
3	WHEEL - 26" DMG, DSG, ULTRA, PRO-SS	1	24-0355		
4	POCKET, ANGLE TOOTH, 18 ON LF 24 ON HF	24	90-7081		
5	POCKET, BOLT 24 ON LF, 30 ON HF	30	90-7082	180	244
6	POCKET, REVERSE TOOTH 2 ON LF & HF	2	90-7083		
7	POCKET, STRAIGHT TOOTH 4 ON LF & HF	4	90-7084		

24-0370	Rev A

STUMP GRINDER HEAD

DECAL ASSEMBLY

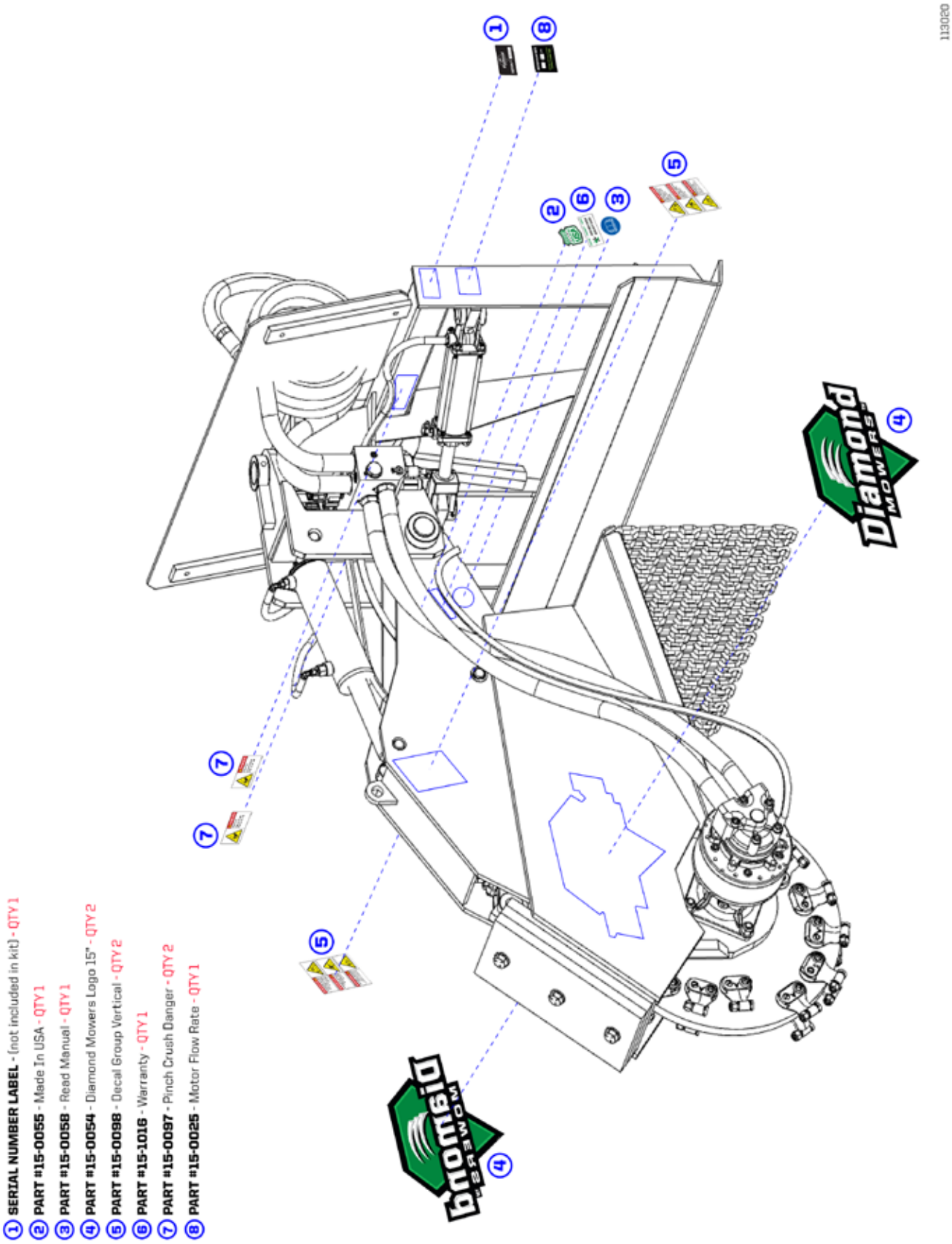

© Diamond Mowers®, LLC

DECK ASSEMBLIES

PISTON MOTOR ASSEMBLY

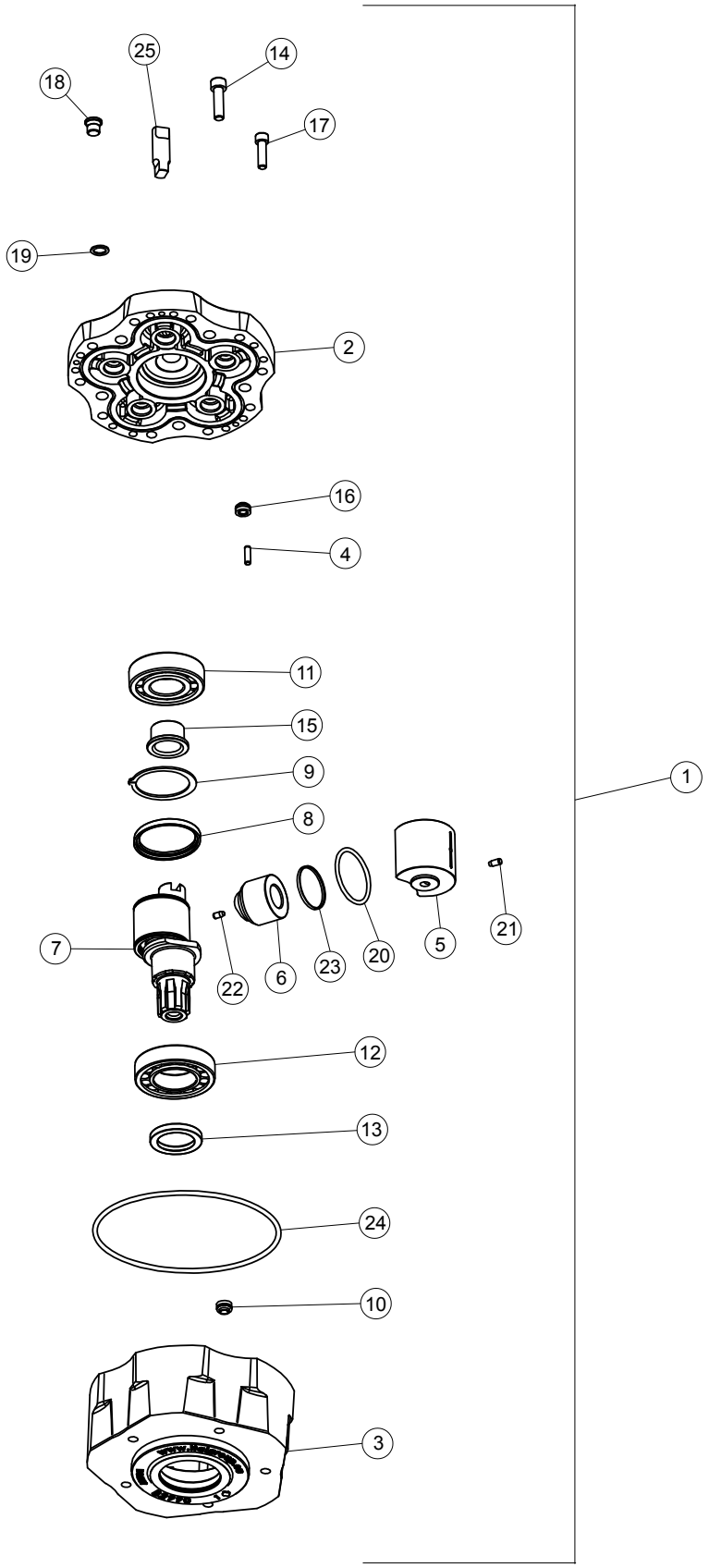

30-0568	Rev: 000

© Diamond Mowers®, LLC

PISTON MOTOR ASSEMBLY

REF#	PARTS DESCRIPTION	REQ	PART#
1	MOTOR, 60CC, 16-20 GPM, HIGH PRESS SEAL	1	30-0568
	MOTOR, 75CC, 21-24 GPM, HIGH PRESS SEAL	1	30-0569
	MOTOR, 90CC, 25-28 GPM, HIGH PRESS SEAL	1	30-0570
	MOTOR, 130CC, 29-33 GPM, HIGH PRESS SEAL	1	30-0571
	MOTOR, 150CC, 34-39 GPM, HIGH PRESS SEAL	1	30-0572
	MOTOR, 170CC, 40-45 GPM, HIGH PRESS SEAL	1	30-0573
2	MOTOR FLANGE	1	30-1383
3	MOTOR BODY	1	30-1384
4	PIN	3	30-1385
5/6	CYLINDER/PISTON 60CC	5	30-1386
	CYLINDER/PISTON 75CC	5	30-1387
	CYLINDER/PISTON 90CC & 130CC	5	30-1388
	CYLINDER/PISTON 150CC	5	30-1389
	CYLINDER/PISTON 170CC	5	30-1390
7	MOTOR SHAFT 60CC	1	30-1391
	MOTOR SHAFT 75CC	1	30-1391
	MOTOR SHAFT 90CC	1	30-1421
	MOTOR SHAFT 130CC	1	30-1391
	MOTOR SHAFT 150CC	1	30-1391
	MOTOR SHAFT 170CC	1	30-1391
8	PISTON RING	2	30-1392
9	RETAINING RING	2	30-1393
10	CYLINDER SEAL	5	30-1394
11	REAR BEARING	1	30-1395
12	FRONT BEARING	1	30-1396
13	SHAFT SEAL	1	30-1397
14	BOLT	10	30-1398
15	BUSHING	1	30-1399
16	CYLINDER SEAL	5	30-1400
17	BOLT	10	30-1401
18	PLUG	1	30-1402
19	COPPER WASHER	1	30-1403
20	O-RING HC05 60CC	5	30-1404
	O-RING HC05 75CC	5	30-1405
	O-RING HC05 90CC & 130 CC	5	30-1406
	O-RING HC05 150CC	5	30-1407
	O-RING HC05 170CC	5	30-1408
21	DRILLED GRUB SCREW	5	30-1409
22	DRILLED GRUB SCREW	5	30-1411
23	SLIPPER SEAL HC05 60CC	5	30-1412
	SLIPPER SEAL HC05 75CC	5	30-1413
	SLIPPER SEAL HC05 90CC & 130CC	5	30-1414
	SLIPPER SEAL HC05 150CC	5	30-1415
	SLIPPER SEAL HC05 1700CC	5	30-1416
24	O-RING	1	30-1417
25	DRIVE PIN	1	30-1418

30-0568	Rev 000

© Diamond Mowers®, LLC

APPENDIX

O-RINGS - S.A.E.

ORING (AS568) BOSS FITTINGS (KIT PART# 33-0122)

SAE SIZES

STANDARD ORING PART #	HYDRAULIC SIZE	ORING ID SAE (IN)	ORING WIDTH SAE (IN)	ORING MATERIAL
902	-2	0.24	0.06	90-durometer Nitrile
903	-3	0.30	0.06	90-durometer Nitrile
904	-4	0.35	0.07	90-durometer Nitrile
905	-5	0.41	0.07	90-durometer Nitrile
906	-6	0.47	0.08	90-durometer Nitrile
908	-8	0.64	0.09	90-durometer Nitrile
910	-10	0.76	0.1	90-durometer Nitrile
912	-12	0.92	0.12	90-durometer Nitrile
914	-14	1.05	0.12	90-durometer Nitrile
916	-16	1.17	0.12	90-durometer Nitrile
920	-20	1.48	0.12	90-durometer Nitrile
924	-24	1.72	0.12	90-durometer Nitrile
932	-32	2.34	0.12	90-durometer Nitrile

ORING (AS568) FLAT SEAL FITTINGS (KIT PART# 33-0123)

SAE SIZES & METRIC SIZES

STANDARD ORING PART #	HYDRAULIC SIZE	END SIZE SAE (IN)	END SIZE METRIC (MM)	ORING ID SAE (IN)	ORING ID METRIC (MM)	ORING WIDTH SAE (IN)	ORING WIDTH METRIC (MM)	ORING MATERIAL
011	-4	1/4	6	0.30	7.70	0.07	1.78	90-durometer Nitrile
012	-6	3/8	8, 10	0.36	9.30	0.07	1.78	90-durometer Nitrile
014	-8	1/2	12	0.49	12.40	0.07	1.78	90-durometer Nitrile
016	-10	5/8	14, 15, 16	0.61	15.60	0.07	1.78	90-durometer Nitrile
018	-12	3/4	18, 20	0.74	18.80	0.07	1.78	90-durometer Nitrile
020	-14	7/8	22	0.86	21.80	0.07	1.78	90-durometer Nitrile
021	-16	1	25	0.93	23.50	0.07	1.78	90-durometer Nitrile
025	-20	1 1/4	28, 30, 32	1.18	29.90	0.07	1.78	90-durometer Nitrile
029	-24	1 1/2	35, 38	1.49	37.80	0.07	1.78	90-durometer Nitrile
135	-32	2	50	1.93	490.00	0.10	2.54	90-durometer Nitrile

© Diamond Mowers®, LLC

APPENDIX

S.A.E. TORQUE SPECIFICATIONS

Nominal Dia. (in.)	threads per inch	Tensile Stress Area (sq. in.)	ASTM A307 Grade A				SAE J429 Grade 5				SAE J429 Grade 8				FNL Grade 9			
			Clamp Load (Lbs.)	Tightening Torque K = 0.15	Tightening Torque K = 0.17	Tightening Torque K = 0.20	Clamp Load (Lbs.)	Tightening Torque K = 0.15	Tightening Torque K = 0.17	Tightening Torque K = 0.20	Clamp Load (Lbs.)	Tightening Torque K = 0.15	Tightening Torque K = 0.17	Tightening Torque K = 0.20	Clamp Load (Lbs.)	Tightening Torque K = 0.15	Tightening Torque K = 0.17	Tightening Torque K = 0.20
Unified Coarse Thread Series																		
1/4	20	0.0318	859	32 in-lbs	37 in-lbs	43 in-lbs	2029	76 in-lbs	86 in-lbs	101 in-lbs	2864	107 in-lbs	122 in-lbs	143 in-lbs	3357	126 in-lbs	143 in-lbs	168 in-lbs
5/16	18	0.0524	1416	66	75	88	3342	157	178	209	4719	221	251	295	5531	259	294	346
3/8	16	0.0775	2092	10 ft-lbs	11 ft-lbs	13 ft-lbs	4940	23 ft-lbs	26 ft-lbs	31 ft-lbs	6974	33 ft-lbs	37 ft-lbs	44 ft-lbs	8174	38 ft-lbs	43 ft-lbs	51 ft-lbs
7/16	14	0.1063	2870	16	18	21	6777	37	42	49	9568	52	59	70	11214	61	70	82
1/2	13	0.1419	3831	24	27	32	9046	57	64	75	12771	80	90	106	14969	94	106	125
9/16	12	0.1819	4912	35	39	46	11599	82	92	109	16375	115	130	154	19193	135	153	180
5/8	11	0.2260	6102	48	54	64	14408	113	128	150	20340	159	180	212	23840	186	211	248
3/4	10	0.3345	9030	85	96	113	21322	200	227	267	30101	282	320	376	35281	331	375	441
7/8	9	0.4617	12467	136	155	182	29436	322	365	429	41556	455	515	606	48707	533	604	710
1	8	0.6057	16355	204	232	273	38616	483	547	644	54517	681	772	909	63899	799	905	1065
1 1/4	7	0.9691	26166	409	463	545	53786	840	952	1121	87220	1363	1545	1817	102229	1597	1810	2130
1 1/2	6	1.4053	37942	711	806	949	77991	1462	1657	1950	126473	2371	2688	3162	148237	2779	3150	3706
Fine Thread Series																		
1/4	28	0.0364	982	37 in-lbs	42 in-lbs	49 in-lbs	2319	87 in-lbs	99 in-lbs	116 in-lbs	3274	123 in-lbs	139 in-lbs	164 in-lbs	3837	144 in-lbs	163 in-lbs	192 in-lbs
5/16	24	0.0581	1568	73	83	98	3702	174	197	231	5226	245	278	327	6125	287	325	383
3/8	24	0.0878	2371	11 ft-lbs	13 ft-lbs	15 ft-lbs	5599	26 ft-lbs	30 ft-lbs	35 ft-lbs	7905	37 ft-lbs	42 ft-lbs	49 ft-lbs	9265	43 ft-lbs	49 ft-lbs	58 ft-lbs
7/16	20	0.1187	3205	18	20	23	7568	41	47	55	10684	58	66	78	12523	68	78	91
1/2	20	0.1600	4319	27	31	36	10197	64	72	85	14396	90	102	120	16873	105	120	141
9/16	18	0.2030	5480	39	44	51	12940	91	103	121	18268	128	146	171	21412	151	171	201
5/8	18	0.2560	6911	54	61	72	16317	127	144	170	23036	180	204	240	27000	211	239	281
3/4	16	0.3730	10070	94	107	126	23776	223	253	297	33566	315	357	420	39343	369	418	492
7/8	14	0.5095	13756	150	171	201	32479	355	403	474	45853	502	568	669	53743	588	666	784
1	14	0.6799	18357	229	260	306	43343	542	614	722	61190	765	867	1020	71720	896	1016	1195
1 1/4	12	1.0729	28970	453	513	604	59548	930	1055	1241	96565	1509	1710	2012	113182	1768	2004	2358
1 1/2	12	1.5810	42688	800	907	1067	87747	1645	1865	2194	142292	2668	3024	3557	166778	3127	3544	4169

The torque values can only be achieved if nut (or tapped hole) has a proof load greater than or equal to the bolt's minimum ultimate tensile strength.
Clamp load calculated as 75% of the proof load when specified by the standard. ASTM A307 utilized 75% of 36,000 PSI.
Torque values for 1/4 and 5/16-in series are in inch-pounds. All other torque values are in foot-pounds.
Torque values calculated from formula T=KDF, where

K = 0.15 for "lubricated" conditions
K = 0.17 for zinc plated and dry conditions; we have also found various forms of customer applied thread lockers to have a similar K value.
K = 0.20 for plain and dry conditions
D = Nominal Diameter
F = Clamp Load

Note: When using Zinc Plated (lubricated with wax) Top Lock Nuts, the K value can vary between 0.12-0.16

METRIC TORQUE SPECIFICATIONS

Nominal Dia. (mm)	Pitch	Class 4.6				Class 8.8				Class 10.9				Class 12.9			
		Clamp Load (lbs)	Tightening Torque Lubricated (ft-lbs)	Tightening Torque Zinc Plated (ft-lbs)	Tightening Torque Plain&Dry (ft-lbs)	Clamp Load (lbs)	Tightening Torque Lubricated (ft-lbs)	Tightening Torque Zinc Plated (ft-lbs)	Tightening Torque Plain&Dry (ft-lbs)	Clamp Load (lbs)	Tightening Torque Lubricated (ft-lbs)	Tightening Torque Zinc Plated (ft-lbs)	Tightening Torque Plain&Dry (ft-lbs)	Clamp Load (lbs)	Tightening Torque Lubricated (ft-lbs)	Tightening Torque As-Received (ft-lbs)	Tightening Torque Plain&Dry (ft-lbs)
4	0.7	333	0.7	0.7	0.9	858	1.7	1.9	2.3	1228	2.4	2.7	3.2	1436	2.8	3.2	3.8
5	0.8	538	1.3	1.5	1.8	1387	3.4	3.9	4.5	1985	4.9	5.5	6.5	2319	5.7	6.5	7.6
6	1	763	2.3	2.6	3.0	1968	5.8	6.6	7.7	2816	8.3	9.4	11.1	3291	9.7	11.0	13.0
7	1	1095	3.8	4.3	5.0	2822	9.7	11.0	13.0	4039	13.9	15.8	18.5	4720	16.3	18.4	21.7
8	1.25	1389	5.5	6.2	7.3	3580	14.1	16.0	18.8	5123	20.2	22.9	26.9	5987	23.6	26.7	31.4
10	1.5	2200	10.8	12.3	14.4	5671	27.9	31.6	37.2	8115	39.9	45.2	53.2	9484	46.7	52.9	62.2
12	1.75	3197	18.9	21.4	25.2	8240	48.7	55.1	64.9	11792	69.6	78.9	92.8	13781	81.4	92.2	108.5
14	2	4379	30.2	34.2	40.2	11289	77.8	88.1	103.7	16154	111.3	126.1	148.4	18879	130.0	147.4	173.4
16	2	5943	47	53	62	15320	121	137	161	21924	173	196	230	25622	202	229	269
18	2.5	7301	65	73	86	18822	167	189	222	26934	239	270	318	31477	279	316	372
20	2.5	9286	91	104	122	23938	236	267	314	34256	337	382	449	40034	394	446	525
22	2.5	11509	125	141	166	29669	321	364	428	42457	460	521	613	49619	537	609	716
24	3	13372	158	179	211	34471	407	461	543	49329	582	660	777	57649	681	771	908
27	3	17428	232	262	309	44924	597	676	796	64288	854	968	1139	75132	998	1131	1331
30	3.5	21266	314	356	419	54819	809	917	1079	78448	1158	1312	1544	91680	1353	1534	1804
33	3.5	26310	427	484	570	67821	1101	1248	1468	97055	1576	1786	2101	113425	1842	2087	2455
36	4	30982	549	622	732	79866	1415	1603	1886	114291	2024	2294	2699	133569	2366	2681	3154

The torque values can only be achieved if nut (or tapped hole) has a proof load greater than or equal to the bolt's minimum ultimate tensile strength.
Clamp loads estimated as 75% of proof load for specified bolts.
Torque values listed in foot-pounds .
Torque values calculated from formula T=KDF where; K=0.15 for "lubricated" condition, K=0.17 for zinc plated and dry condition (or as-received for the 12.9), K=0.20 for plain and dry condition

© Diamond Mowers®, LLC

(This Page Is Intentionally Left Blank)

DEMAND
BRILLIANCE

DIAMONDMOWERS.COM

210810